Linear Motion Systems

THOMSON®

Linear Motion. **Optimized.**™

www.thomsonlinear.com

THOMSON®

Linear Motion. ***Optimized.***™

Thomson - the Choice for Optimized Motion Solutions

Often the ideal design solution is not about finding the fastest, sturdiest, most accurate or even the least expensive option. Rather, the ideal solution is the optimal balance of performance, life and cost.

Quickly Configure the Optimal Mechanical Motion Solution

Thomson has several advantages that makes us the supplier of choice for motion control technology.

- Thomson owns the broadest standard product offering of mechanical motion technologies in the industry.
- Modified versions of standard product or white sheet design solutions are routine for us.
- Choose Thomson and gain access to over 70 years of global application experience in industries including packaging, factory automation, material handling, medical, clean energy, printing, automotive, machine tool, aerospace and defense.
- As part of Fortive Corporation, we are financially strong and unique in our ability to bring together control, drive, motor, power transmission and precision linear motion technologies.

A Name You Can Trust

A wealth of product and application information as well as 3D models, software tools, our distributor locator and global contact information is available at www.thomsonlinear.com/contact_us. Talk to us early in the design process to see how Thomson can help identify the optimal balance of performance, life and cost for your next application. And, call us or any of our 2000+ distribution partners around the world for fast delivery of replacement parts.

The Fortive Business System

The Fortive Business System (FBS) was established to increase the value we bring to customers. It is a mature and successful set of tools we use daily to continually improve manufacturing operations and product development processes. FBS is based on the principles of Kaizen which continuously and aggressively eliminates waste in every aspect of our business. FBS focuses the entire organization on achieving breakthrough results that create competitive advantages in quality, delivery and performance – advantages that are passed on to you. Through these advantages Thomson is able to provide you faster times to market as well as unsurpassed product selection, service, reliability and productivity.

Local Support Around the Globe

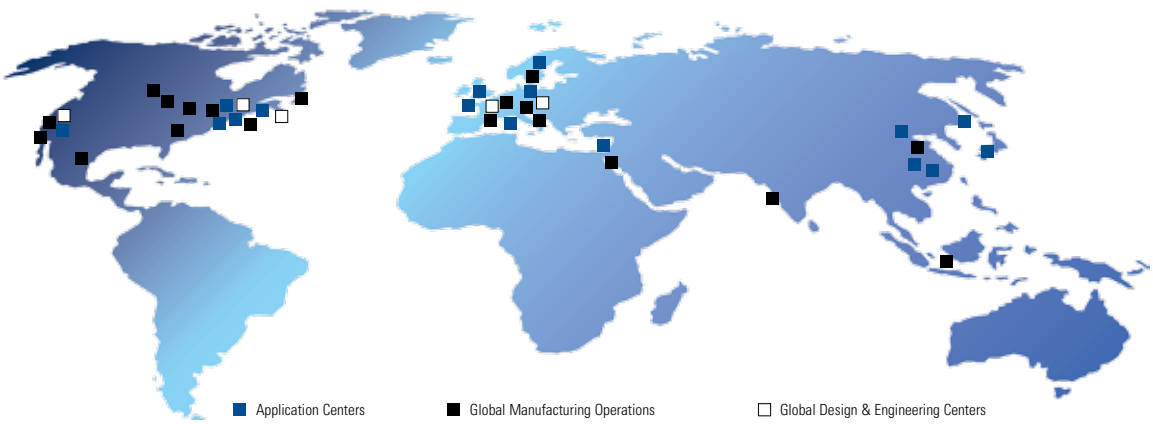

Table of Contents

Thomson **5**
Linear Motion Systems at Work **6**
Simple Product Selection with Linear Motioneering® **7**
Linear Motion System Group Selection Chart ..... **8 - 9**

Linear Motion Systems with Lead or Ball Screw Drive and Ball Guide **10**
Overview ..... 10 - 13
WM40S ..... 14 - 15
WM40D ..... 16 - 17
WM60D ..... 18 - 19
WM60S ..... 20 - 21
WM60X ..... 22 - 23
WM80D ..... 24 - 25
WM80S ..... 26 - 27
WM120D ..... 28 - 29
WV60 ..... 30 - 31
WV80 ..... 32 - 33
WV120 ..... 34 - 35
MLSM60D ..... 36 - 37
MLSM80D ..... 38 - 39
M55 ..... 40 - 41
M75 ..... 42 - 43
M100 ..... 44 - 45
2HB10 ..... 46 - 47
2HB20 ..... 48 - 49
2RB12 ..... 50 - 51
2RB16 ..... 52 - 53
MS25 ..... 54 - 55
MS33 ..... 56 - 57
Units with inch interface
2DB08 ..... 58 - 59
2DB12O ..... 60 - 61
2DB12J ..... 62 - 63
2DB16O ..... 64 - 65
2DB16J ..... 66 - 67

Linear Motion Systems with Ball Screw Drive and Slide Guide **68**
Overview ..... 68 - 69
M55 ..... 70 - 71
M75 ..... 72 - 73
M100 ..... 74 - 75

Linear Motion Systems with Belt Drive and Ball Guide **76**
Overview ..... 76 - 77
WH40 ..... 78 - 79
WM60Z ..... 80 - 81
WM80Z, standard carriage ..... 82 - 83
WM80Z, short carriage ..... 84 - 85
M55 ..... 86 - 87
M75 ..... 88 - 89
M100 ..... 90 - 91
MLSM80Z ..... 92 - 93

Linear Motion Systems with Belt Drive and Slide Guide **94**
Overview ..... 94 - 95
M50 ..... 96 - 97
M55 ..... 98 - 99
M75 ..... 100 - 101
M100 ..... 102 - 103

Linear Motion Systems with Belt Drive and Wheel Guide **104**
Overview ..... 104 - 105
WH50 ..... 106 - 107
WH80 ..... 108 - 109
WH120 ..... 110 - 111
MLSH60Z ..... 112 - 113

Linear Lifting Units **114**
Overview ..... 114 - 115
WHZ50 ..... 116 - 117
WHZ80 ..... 118 - 119
Z2 ..... 120 - 121
Z3 ..... 122 - 123

Linear Rod Units **124**
Overview ..... 124 - 125
WZ60 ..... 126 - 127
WZ80 ..... 128 - 129

Accessories **131**
Accessory Index 131
Mounting Kits ..... 132 - 136
Cover and Protection Kits ..... 137 - 140
Motors, Gears and Transmission Kits ..... 141 - 160
Electrical Feedback Devices ..... 161 - 172
Non-driven Units ..... 173 - 177

Additional Technical Data **178**
Additional Technical Data Tables ..... 178 - 182
Drive Calculations ..... 183 - 184
Deflection Calculations ..... 185 - 186

Ordering Keys **187**
Keys for Units with Lead or Ball Screw Drive and Ball Guides ..... 187 - 194
Keys for Units with Ball Screw Drive and Slide Guides 195
Keys for Units with Belt Drive and Ball Guides ..... 196 - 199
Keys for Units with Belt Drive and Slide Guides 200
Keys for Units with Belt Drive and Wheel Guides ..... 201 - 202
Keys for Linear Lifting Units 203
Keys for Linear Rod Units 204
Keys for Non-driven Units ..... 205 - 206

Terminology **207**
Basic Linear Motion System Terminology 207

Glossary **208**
A - Belt D 208
Belt G - C 209
D - E 210
G - M 211
N - Sc 212
Si - W 213

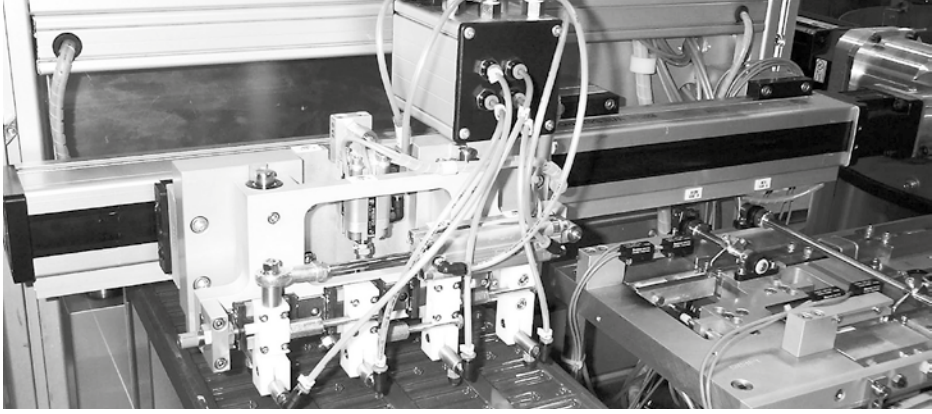

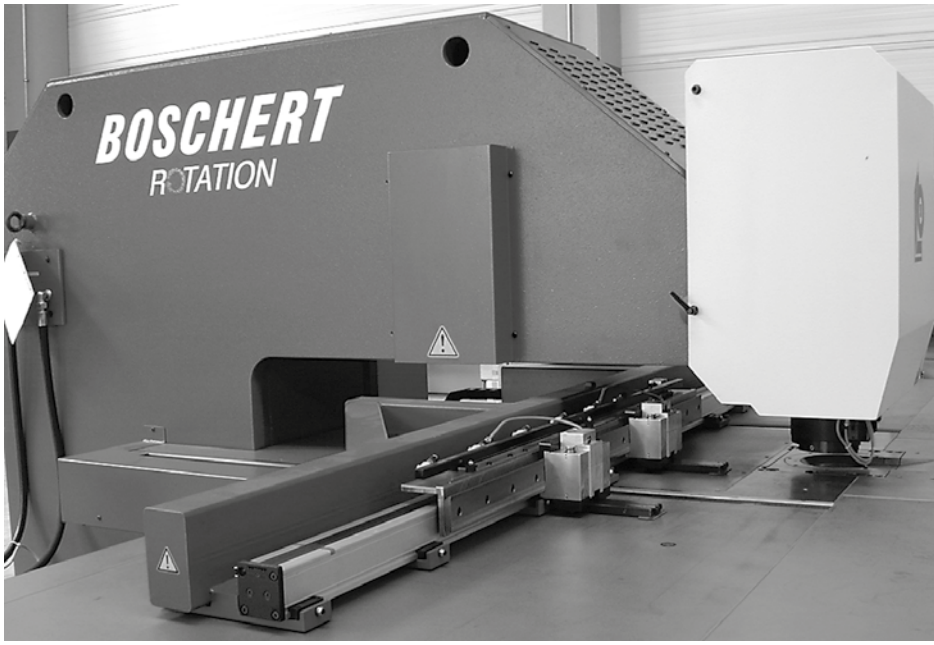
BOSCHERT
ROTATION

MOVORAIL
125 KG

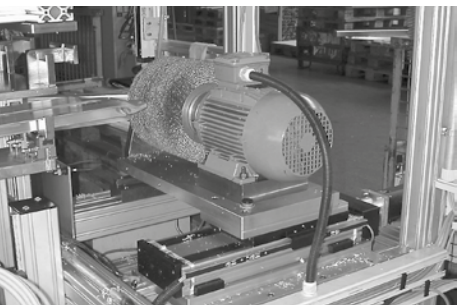

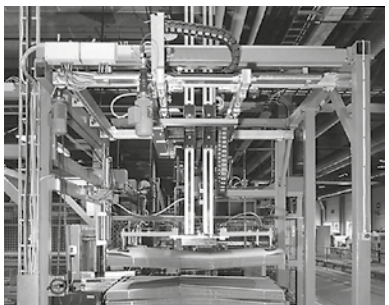

Thomson

The optimal balance of performance, life and cost

The unmatched breadth of the Thomson linear motion system product line comes from the consolidation of three world-reknowned brands: Thomson, Neff and Tollo. We are product innovators with decades of application experience. Unbiased ownership of the multiple motion system technologies enables Thomson to provide you with the optimal balance of performance versus installed cost for your application.

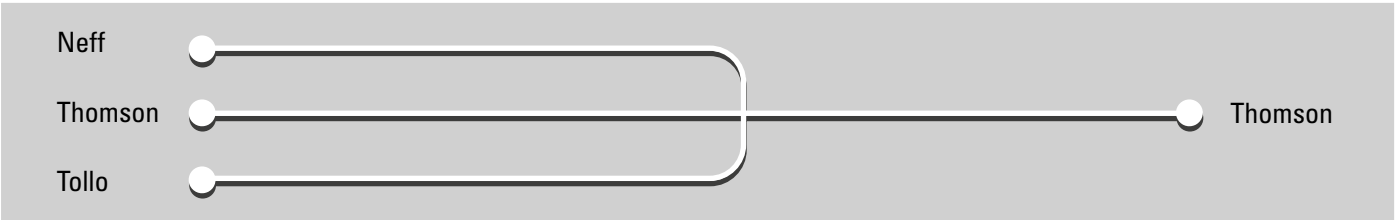

Thomson introduced the first ball screw actuator into an aviation application in 1939 and invented the anti-friction Linear Ball Bushing® Bearing in 1945. Thomson has been a market leader with an increasing portfolio of linear motion technologies ever since.

Founded in 1905, Neff offered products for the linear motion market and, over the decades, became a market leader in ball screw technology. The first linear motion system from Neff was presented in 1981 at the FAMETA show in Stuttgart.

Tollo began in 1981 as a lifting equipment manufacturer. The product line grew rapidly thereafter and, in 1982, Tollo presented their first linear motion system at the Technical Fair in Stockholm.

Thomson has consolidated the most competitive and complementary products from each brand into the most advanced, most comprehensive product portfolio available today. The range covers the smallest and most compact linear motion systems to the biggest and most robust. Our wide range of guide and drive systems can be configured economically and can also work in harsh environments, at high speeds, and in high precision applications.

Thomson is linear motion, optimized.

Linear Motion Systems at Work

Application Examples

Thomson Linear Motion Systems can be used in almost all industries. The breadth of our range makes it possible to find the optimum solution for most applications imaginable. If the standard range is not enough, Thomson is happy to discuss a custom solution that meets your needs. Below is a small selection of applications where linear motion systems have been used successfully. Contact us and we can show you many, many more.

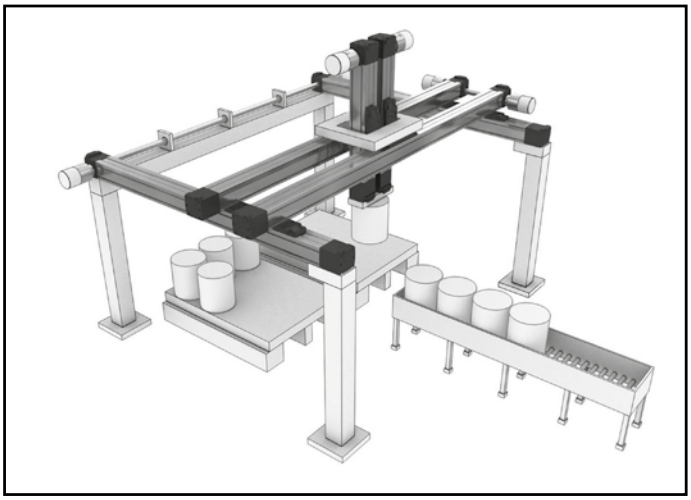

Handling
Linear motion systems are ideal for handling applications. Thomson has units suitable for the harsh environments in food and paper industries to the rigorous cleanliness demands found in the medical and electronics industries.

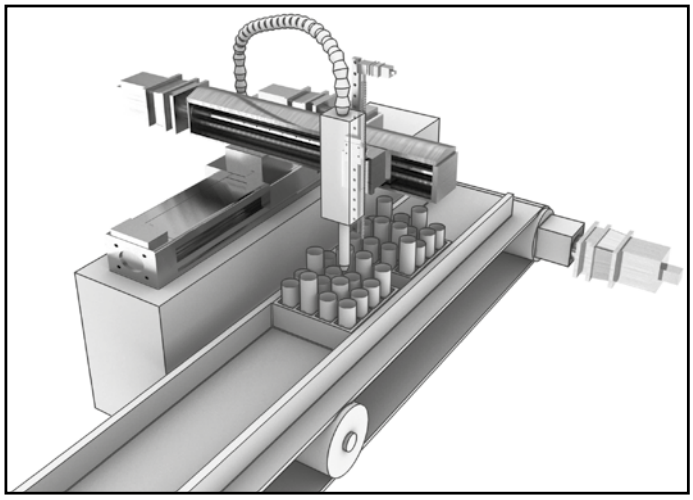

Medical and laboratory
In this application a robot made of linear motion systems is used to pick samples from test tubes of different heights. Thomson has the small, quiet, quick and accurate units you need to build this type of equipment.

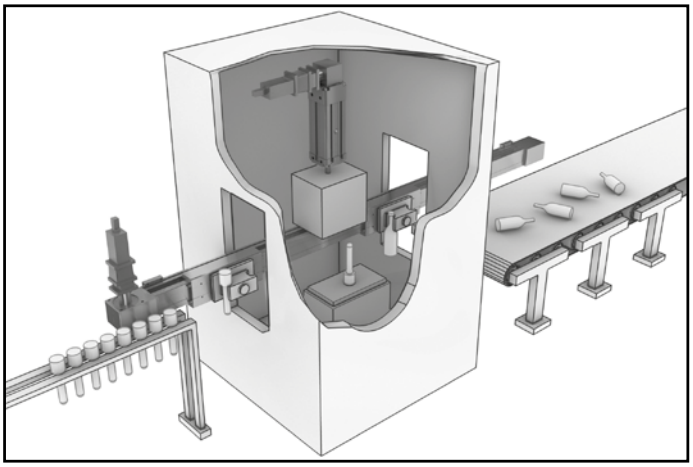

Transportation and transfer
Whenever you may need to move something from one place to another a linear motion system can be the answer. Here a molding machine is fed and emptied at high speed.

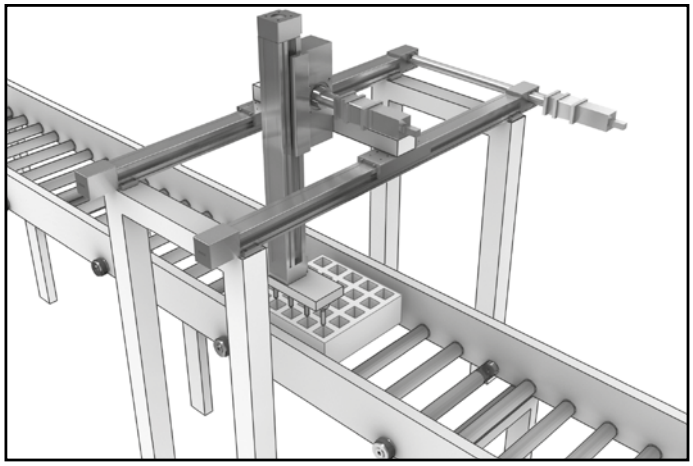

Packaging, filling and dispensing
To fill, close, stack, label or print on boxes or other containers of almost any size and weight is easily done with linear motion systems.

Simple Product Selection with Linear Motioneering®

On-Line Product Selection

The Linear Motioneering sizing and selection tool is designed to make it simple to choose the right linear motion system for your application. Linear Motioneering is very easy to use, just enter the basic parameters for your application and watch as Linear Motioneering does all the work. Linear Motioneering calculates application parameters through a comprehensive set of algorithms and compares your results to our product database to determine an optimized solution set.

To determine which linear motion system is best suited for your application you just enter the application parameters in seven simple steps into Linear Motioneering. Once a product solution is selected, choose from a wide assortment of accessories, motors, and motor mounts.

The program will output a 2D drawing or an interactive 3D model, list prices, delivery times, and ordering information. In your account you can see your quote history. Please visit www.linearmotioneering.com for more information.

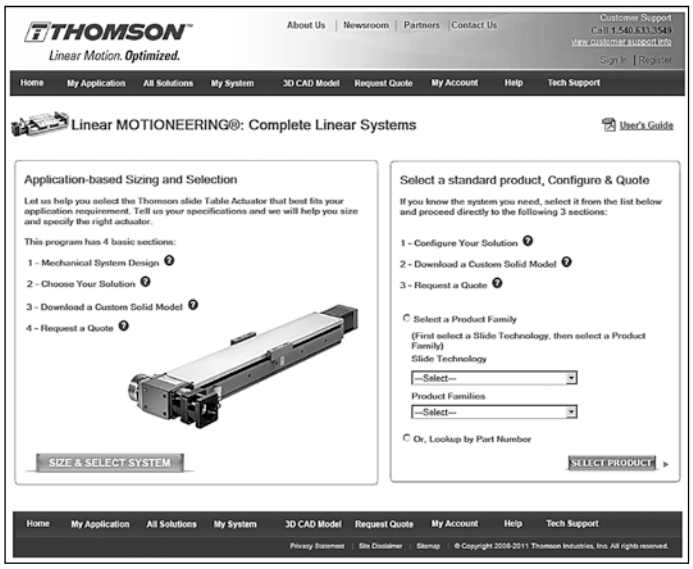

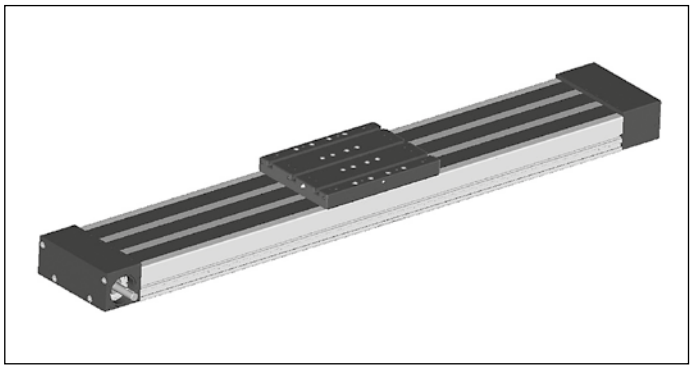

Seven simple steps

1. Visit www.linearmotioneering.com
2. Create an account
3. Enter the system orientation
4. Enter the positioning requirements
5. Enter any environmental conditions
6. Enter the load and the forces
7. Enter the move profile requirements

Outputs

1. 2D drawings or interactive 3D models
2. List prices
3. Delivery times
4. Ordering information

Linear Motion System Group Selection Chart

How to select appropriate product group

Thomson linear motion systems offers two drive options (screw or belt drive) and three carriage guidance options (ball, slide or wheel guides). The chart below provides reference to the ideal product combination based on the general application type.

Application Type Group 1

Instrumentation and other low-load applications. Repeatability and/or spatial constraints may be critical.

- Small-scale material handling
- Medical instrumentation
- Lab automation
- Vending machines

Load < 15 kg
Smallest spatial footprint
Repeatability ± 0,005 mm
Stroke up to 0,7 m

Type: MS Drive: Screw Guides: Ball

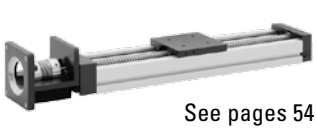

See pages 54 - 57

Repeatability ± 0,05 mm
Speeds up to 3 m/s
Strokes up to 2 m

Type: WH40 Drive: Belt Guides: Ball

See pages 78 - 79

Application Type Group 2

Economical point-to-point transport motion. Speed and/or environmental protection may be critical.

- Packaging
- Filling and dispensing
- Factory automation
- Material handling
- Printing and scanning
- Food processing

Repeatability ± 0,05 mm
Speeds up to 1,6 m/s
Strokes up to 6 m

Type: M Drive: Screw Guides: Slide

See pages 70 - 75

Repeatability ± 0,2 mm
Speeds up to 5 m/s
Strokes up to 12 m

Type: M Drive: Belt Guides: Slide

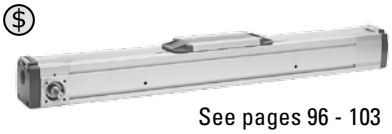

See pages 96 - 103

Application Type Group 3

Motion with tighter accuracy requirements. Stiffness and rigidity may be critical.

- Machine tool material handling
- Machine tool automation
- Test and measurement
- Inspection equipment
- Automotive assembly

Repeatability
< ± 0,02 mm

Type: WM Drive: Screw Guides: Ball

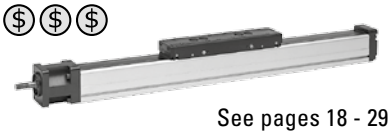

See pages 18 - 29

Linear Motion System Group Selection Chart

How to select appropriate product group

How to use the selection chart

1. Chose the one of the three general application type groups that match your application the best.
2. Move right in the chart until you identified a possible unit type for your needs.
3. Look up the unit type in the catalog and see if there is a size or version among them that match.
4. If you find a match, go to step 5. If not, go back to the chart and identify the next possible unit type and repeat.
5. Confirm the choice by performing the necessary calculations. The Linear Motioneering Sizing and Selection Tool or the Thomson customer support team can help you with this.

Cost indicator legend	
$	Lowest cost
$ $	
$ $ $	
$ $ $ $	Highest cost

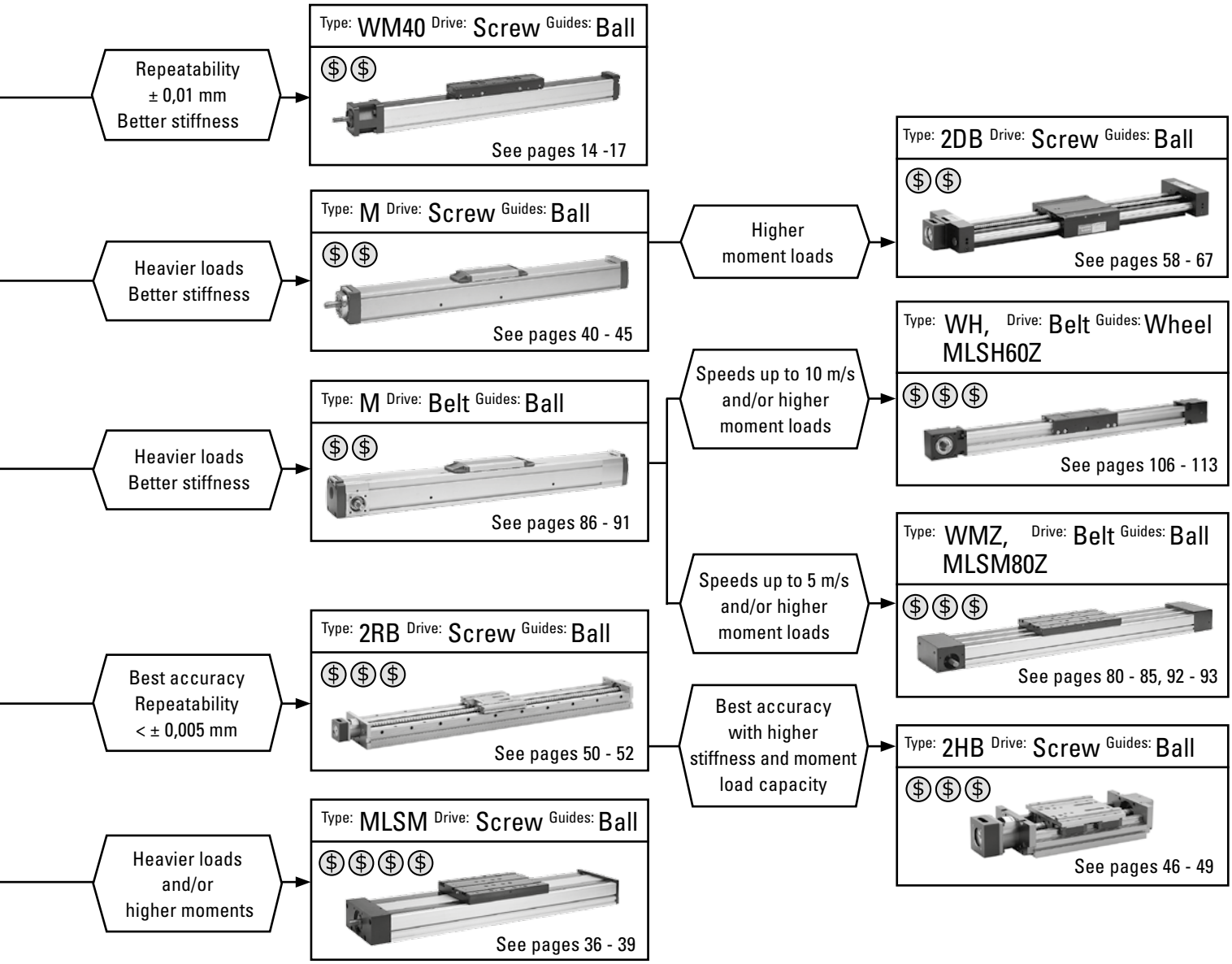

Linear Motion Systems with Ball Screw Drive and Ball Guide

Overview

PowerLine WM

WM40

Features

- Can be installed in any orientation
- Patented guide system
- Patented self-adjusting plastic cover band[1]
- Patented screw support system

Parameter		WM40S	WM40D	WM60D	WM60S	WM60X	WM80D	WM80S	WM120D
Profile size (width × height)	[mm]	40 × 40	40 × 40	60 × 60	60 × 60	60 × 60	80 × 80	80 × 80	120 × 120
Stroke length (Smax), maximum	[mm]	2000	1950	11000	10390	10340	11000	10540	11000
Linear speed, maximum	[m/s]	0,25	0,25	2,5	2,5	0,25	2,5	2,5	2,0
Dynamic carriage load (Fz), maximum	[N]	600	600	2000	1400	2000	3000	2100	6000
Remarks		single ball nut	double ball nuts	double ball nuts	single ball nut	left/right screw	double ball nuts	single ball nut	double ball nuts
Page		14	16	18	20	22	24	26	28

[1] Not on WM40 units

WM-Series Technical Presentation

Screw support
Patented screw support system permits high speeds at long stroke lengths while reducing the available stroke with a minimum.

Double ball nuts
Double pre-tensioned ball nuts improve the accuracy and allow re-tensioning, increasing the lifetime of the unit.

Central lubrication
One central lubrication point on the carriage services the entire unit resulting in a minimum maintenace requirement.

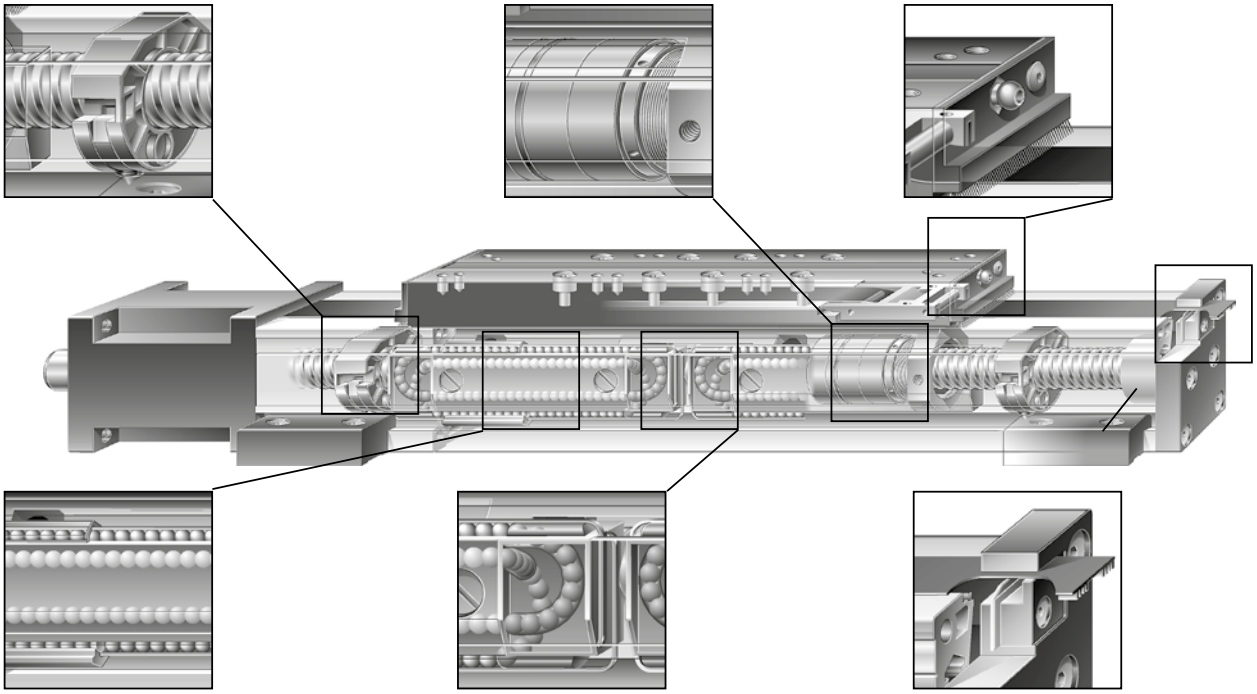

Ball guides
Integrated patented ball guides with hardened steel tracks for optimum performance.

Ball cages
The balls in the ball guides are protected by a ball cage which ensures a long life.

Cover band
The patented self-adjusting cover band protect the unit from the penetration of dirt, dust and liquids.

Linear Motion Systems with Lead or Ball Screw Drive and Ball Guide

Overview

PowerLine **WV**

WV80

Features

- Can be installed in any orientation
- Patented self-adjusting plastic cover band
- Patented screw support system
- The units require external guides

Parameter		WV60	WV80	WV120
Profile size (width × height)	[mm]	60 × 60	80 × 80	120 × 120
Stroke length (Smax), maximum	[mm]	11000	11000	11000
Linear speed, maximum	[m/s]	2,5	2,5	2,0
Dynamic carriage load (Fz), maximum	[N]	-	-	-
Remarks		double ball nuts the units has no guides	double ball nuts the units has no guides	double ball nuts the units has no guides
Page		30	32	34

ForceLine **MLSM**

MLSM80D

Features

- Can be installed in any orientation
- Patented guide system
- Patented plastic cover band
- Patented screw support system

Parameter		MLSM60D	MLSM80D
Profile size (width × height)	[mm]	160 × 65	240 × 85
Stroke length (Smax), maximum	[mm]	4985	5200
Linear speed, maximum	[m/s]	2,5	2,0
Dynamic carriage load (Fz), maximum	[N]	6000	8000
Remarks		double ball nuts	double ball nuts
Page		36	38

Linear Motion Systems with Lead or Ball Screw Drive and Ball Guide

Overview

Movopart M

M75

Features
- Can be installed in any orientation
- Self-adjusting stainless steel cover band
- Internal ball guides
- Wash down protected versions available

Parameter		M55	M75	M100
Profile size (width × height)	[mm]	58 × 55	86 × 75	108 × 100
Stroke length (Smax), maximum	[mm]	3000	4000	6000
Linear speed, maximum	[m/s]	1,6	1,0	1,25
Dynamic carriage load (Fz), maximum	[N]	400	1450	3000
Remarks		ballscrew driven, single ball nut	ballscrew driven, single ball nut	ballscrew driven, single ball nut
Page		40	42	44

2HB

2HB20

Features
- Can be installed in any orientation
- High load capabilities
- Low profile height
- Preloaded ballscrew and bearing carriages offer high stiffness / rigidity
- Corrosion resistant options available.

Parameter		2HB10	2HB20
Profile size (width × height)	[mm]	100 × 60	200 × 90
Stroke length (Smax), maximum	[mm]	1375	2760
Linear speed, maximum	[m/s]	0,47	0,95
Dynamic carriage load (Fz), maximum	[N]	8000	34000
Remarks		bellows or shroud options available	bellows or shroud options available
Page		46	48

2RB

2RB16

Features
- Can be installed in any orientation
- High load capabilities
- Low profile height
- Preloaded ballscrew and Super Smart bearing configuration provides stiffness / rigidity
- Corrosion resistant options available.

Parameter		2RB12	2RB16
Profile size (width × height)	[mm]	130 × 40	160 × 48
Stroke length (Smax), maximum	[mm]	1951	2815
Linear speed, maximum	[m/s]	0,47	0,73
Dynamic carriage load (Fz), maximum	[N]	1760	5176
Remarks		bellows option available	bellows option available
Page		50	52

Linear Motion Systems with Lead or Ball Screw Drive and Ball Guide

Overview

MicroStage MS

MS33

Features

- Compact, lightweight package
- Stainless steel leadscrew with anti-backlash nut offers precise repeatability
- Segmented linear bearings provide smooth motion
- Corrosion resistant options available

Parameter		MS25	MS33
Profile size (width × height)	[mm]	50 × 25	60 × 33
Stroke length (Smax), maximum	[mm]	705,5	704
Linear speed, maximum	[m/s]	0,85	1,02
Dynamic carriage load (Fz), maximum	[N]	100	150
Remarks		bellows option available	bellows option available
Page		54	56

2DB

2DB12

INCH INTERFACE

Features

- Integrated dual-rail, webbed shaft ideal for loading in all orientations
- Low-profile height
- Super Smart bushings with low friction for smooth motion
- Easy mounting
- Corrosion resistant options available

Parameter		2DB08	2DB12O	2DB12J	2DB16O	2DB16J
Profile size (width × height)	[in]	4.5 × 1.625	6 × 2.125	6 × 2.562	7.5 × 2.625	7.5 × 3.062
Stroke length (Smax), maximum	[in]	41	63	63	84.5	84.5
Linear speed, maximum	[in/s]	33.3	10.0	25.0	8.3	41.67
Dynamic carriage load (Fz), maximum	[lbs]	336	2115	2115	3555	3555
Remarks		leadscrew driven	ballscrew driven integrated carriage	ballscrew driven modular carriage	ballscrew driven integrated carriage	ballscrew driven modular carriage
Page		58	60	62	64	66

WM40S

Ball Screw Drive, Ball Guide, Single Ball Nut

» Ordering key - see page 187
» Accessories - see page 131
» Additional data - see page 178

General Specifications

Parameter	WM40S
Profile size (w × h) [mm]	40 × 40
Type of screw	ball screw with single nut
Carriage sealing system	plastic cover band
Screw supports	included in all units that require screw supports
Lubrication	central lubrication of all parts that require lubrication
Included accessories	4 × mounting clamps

Performance Specifications

for Units with Single Standard Carriage (N)[1]

Parameter		WM40S
Stroke length (Smax), maximum	[mm]	2000
Total length (L tot), maximum	[mm]	2300
Linear speed, maximum	[m/s]	0,25
Acceleration, maximum	[m/s²]	20
Repeatability	[± mm]	0,02
Input speed, maximum	[rpm]	3000
Operation temperature limits	[°C]	0 – 80
Dynamic load (Fx), maximum	[N]	1000
Dynamic load (Fy), maximum	[N]	450
Dynamic load (Fz), maximum	[N]	600
Dynamic load torque (Mx), maximum	[Nm]	10
Dynamic load torque (My), maximum	[Nm]	30
Dynamic load torque (Mz), maximum	[Nm]	30
Drive shaft force (Frd), maximum	[N]	100
Drive shaft torque (Mta), maximum	[Nm]	3
Ball screw diameter (d_0)	[mm]	12
Ball screw lead (p)	[mm]	5
Weight	[kg]	
of unit with zero stroke		1,50
of every 100 mm of stroke		0,30
of each carriage		0,36

[1] See next page for deviating values of units with other carriage types.

Carriage Idle Torque (M idle) [Nm]

Input speed [rpm]	Screw lead [mm]
	p = 5
150	0,3
1500	0,5
3000	0,8

M idle = the input torque needed to move the carriage with no load on it.

Deflection of the Profile

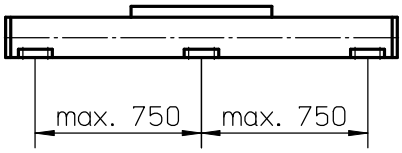

A mounting clamp must be installed at least every 750 mm to be able to operate at maximum load. Less clamps may be required if less load is being operated, see the additional technical data for more information.

Critical Speed

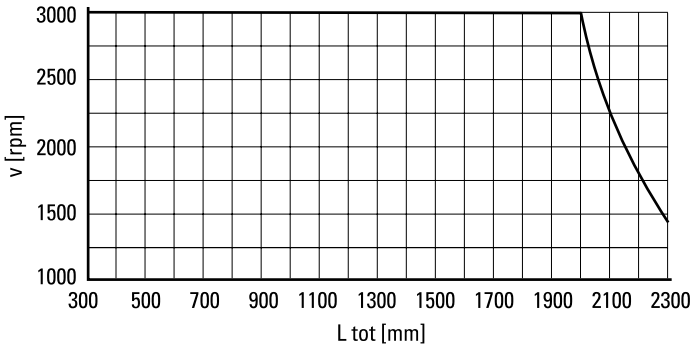

Definition of Forces

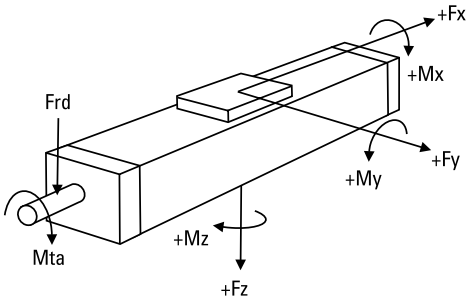

WM40S

Ball Screw Drive, Ball Guide, Single Ball Nut

Dimensions	Projection
METRIC	

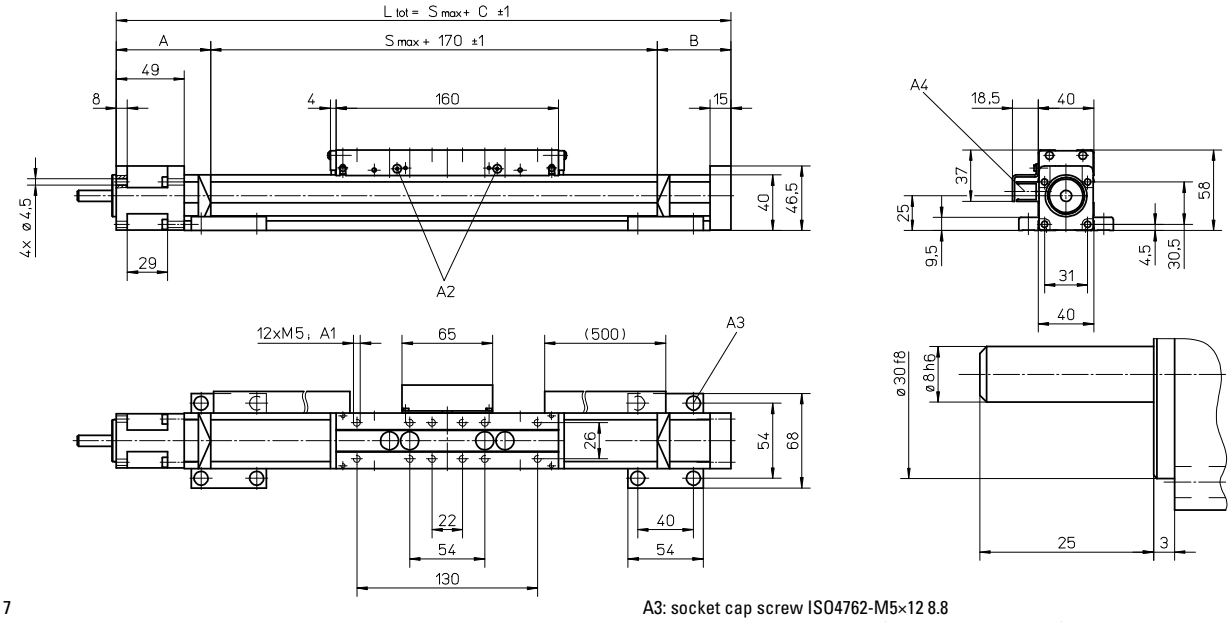

A1: depth 7
A2: lubricating nipple on both sides DIN3405 D 1/A
A3: socket cap screw ISO4762-M5×12 8.8
A4: ENF inductive sensor rail kit (optional - see page 172)

Stroke length (Smax) [mm]	A [mm]	B [mm]	C [mm]
0 – 500	65	35	270
501 – 1100	65	45	280
1101 – 2000	70	60	300

Performance Specifications

for Units with Double Standard Carriage (Z)

Parameter		WM40S
Stroke length (Smax), maximum	[mm]	1825
Total length (L tot), maximum	[mm]	2300
Minimum distance between carriages (L A)	[mm]	175
Dynamic load (Fy), maximum	[N]	900
Dynamic load (Fz), maximum	[N]	1200
Dynamic load torque (My), maximum	[Nm]	L A[1] × 0,45
Dynamic load torque (Mz), maximum	[Nm]	L A[1] × 0,6
Force required to move second carriage	[N]	4
Total length (L tot)	[mm]	Smax + C + L A

[1] Value in mm

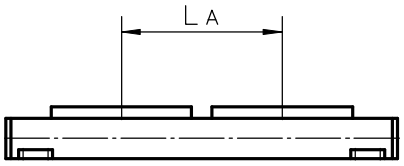

WM40D

Ball Screw Drive, Ball Guide, Double Ball Nuts, Long Carriage

» Ordering key - see page 187
» Accessories - see page 131
» Additional data - see page 178

General Specifications

Parameter	WM40D
Profile size (w × h) [mm]	40 × 40
Type of screw	ball screw with double nuts
Carriage sealing system	plastic cover band
Screw supports	included in all units that require screw supports
Lubrication	central lubrication of all parts that require lubrication
Included accessories	4 × mounting clamps

Performance Specifications

for Units with Single Long Carriage (L)[1]

Parameter		WM40D
Stroke length (Smax), maximum	[mm]	1950
Total length (L tot), maximum	[mm]	2300
Linear speed, maximum	[m/s]	0,25
Acceleration, maximum	[m/s²]	20
Repeatability	[± mm]	0,01
Input speed, maximum	[rpm]	3000
Operation temperature limits	[°C]	0 – 80
Dynamic load (Fx), maximum	[N]	1000
Dynamic load (Fy), maximum	[N]	450
Dynamic load (Fz), maximum	[N]	600
Dynamic load torque (Mx), maximum	[Nm]	10
Dynamic load torque (My), maximum	[Nm]	30
Dynamic load torque (Mz), maximum	[Nm]	30
Drive shaft force (Frd), maximum	[N]	100
Drive shaft torque (Mta), maximum	[Nm]	3
Ball screw diameter (d_0)	[mm]	12
Ball screw lead (p)	[mm]	5
Weight	[kg]	
of unit with zero stroke		1,90
of every 100 mm of stroke		0,30
of each carriage		0,60

[1] See next page for deviating values of units with other carriage types.

Carriage Idle Torque (M idle) [Nm]

Input speed [rpm]	Screw lead [mm]
	p = 5
150	0,4
1500	0,6
3000	0,9

M idle = the input torque needed to move the carriage with no load on it.

Deflection of the Profile

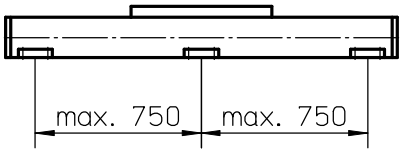

A mounting clamp must be installed at least every 750 mm to be able to operate at maximum load. Less clamps may be required if less load is being operated, see the additional technical data for more information.

Critical Speed

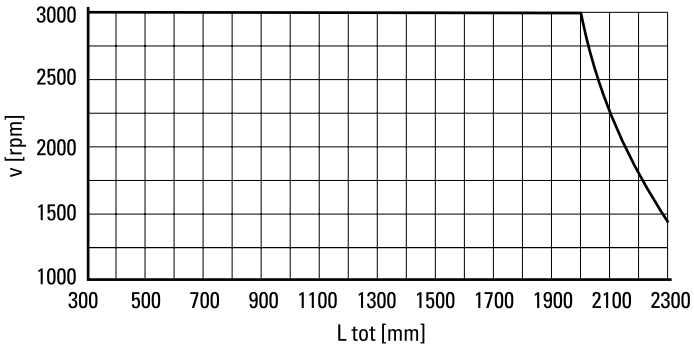

Definition of Forces

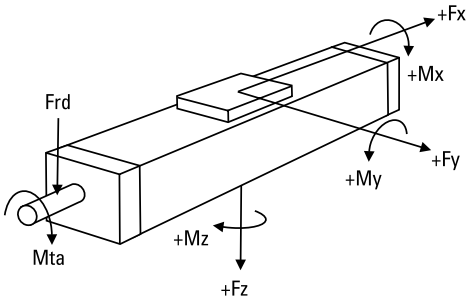

WM40D

Ball Screw Drive, Ball Guide, Double Ball Nuts, Long Carriage

Dimensions	Projection
METRIC	

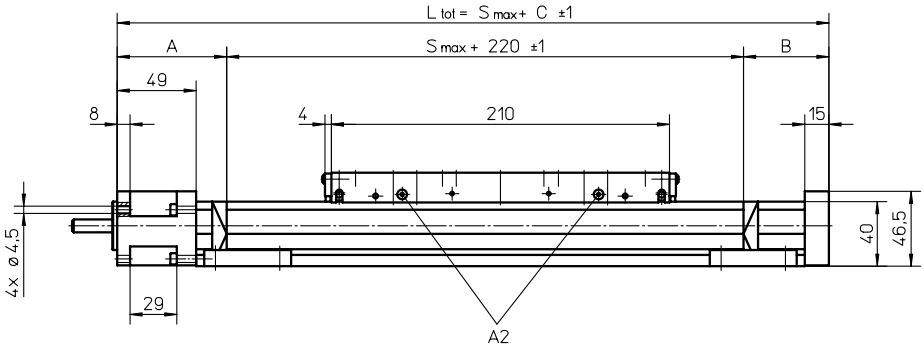

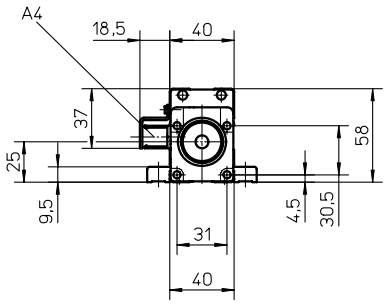

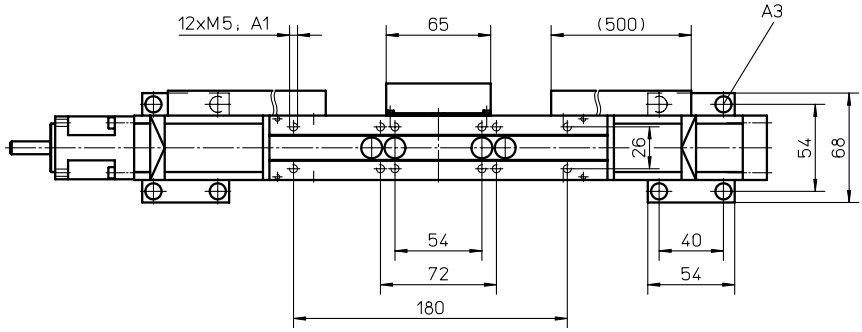

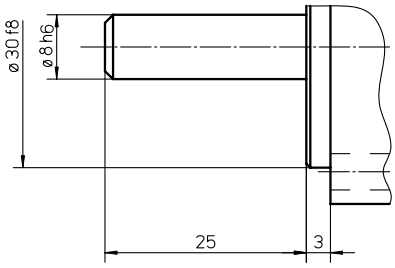

A1: depth 6
A2: lubricating nipple on both sides DIN3405 D 1/A
A3: socket cap screw ISO4762-M5×12 8.8
A4: ENF inductive sensor rail kit (optional - see page 172)

Stroke length (Smax) [mm]	A [mm]	B [mm]	C [mm]
0 – 450	65	35	320
451 – 1050	65	45	330
1051 – 1950	70	60	350

Performance Specifications

for Units with Double Long Carriage (M)

Parameter		WM40D
Stroke length (Smax), maximum	[mm]	1725
Total length (L tot), maximum	[mm]	2300
Minimum distance between carriages (L_A)	[mm]	225
Dynamic load (Fy), maximum	[N]	900
Dynamic load (Fz), maximum	[N]	1200
Dynamic load torque (My), maximum	[Nm]	L_A[1] × 0,45
Dynamic load torque (Mz), maximum	[Nm]	L_A[1] × 0,6
Force required to move second carriage	[N]	4
Total length (L tot)	[mm]	Smax + C + L_A

[1] Value in mm

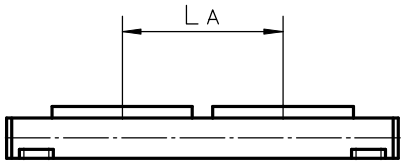

WM60D

Ball Screw Drive, Ball Guide, Double Ball Nuts

» Ordering key - see page 187
» Accessories - see page 131
» Additional data - see page 178

General Specifications

Parameter	WM60D
Profile size (w × h) [mm]	60 × 60
Type of screw	ball screw with double nut
Carriage sealing system	self-adjusting plastic cover band
Screw supports	included in all units that require screw supports
Lubrication	central lubrication of all parts that require lubrication
Included accessories	4 × mounting clamps

Performance Specifications

for Units with Single Standard Carriage (N)[1]

Parameter		WM60D
Stroke length (Smax), maximum	[mm]	
screw lead 5, 20 mm		11000
screw lead 50 mm		5000
Total length (L tot), maximum	[mm]	
screw lead 5, 20 mm		12130
screw lead 50 mm		5780
Linear speed, maximum	[m/s]	2,5
Acceleration, maximum	[m/s²]	20
Repeatability	[± mm]	0,01
Input speed, maximum	[rpm]	3000
Operation temperature limits	[°C]	0 – 80
Dynamic load (Fx), maximum	[N]	4000
Dynamic load (Fy), maximum	[N]	2000
Dynamic load (Fz), maximum	[N]	2000
Dynamic load torque (Mx), maximum	[Nm]	100
Dynamic load torque (My), maximum	[Nm]	200
Dynamic load torque (Mz), maximum	[Nm]	200
Drive shaft force (Frd), maximum	[N]	500
Drive shaft torque (Mta), maximum	[Nm]	35
Ball screw diameter (d_0)	[mm]	20
Ball screw lead (p)	[mm]	5, 20, 50
Weight	[kg]	
of unit with zero stroke		6,16
of every 100 mm of stroke		0,65
of each carriage		1,99

[1] See next page for deviating values of units with other carriage types.

Carriage Idle Torque (M idle) [Nm]

Input speed [rpm]	Screw lead [mm]		
	p = 5	p = 20	p = 50
150	0,8	1,3	1,6
1500	1,4	2,0	2,4
3000	1,8	2,3	2,6

M idle = the input torque needed to move the carriage with no load on it.

Deflection of the Profile

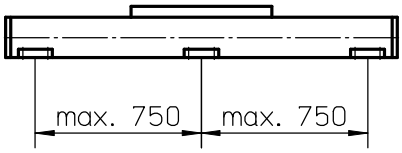

A mounting clamp must be installed at least every 750 mm to be able to operate at maximum load. Less clamps may be required if less load is being operated, see the additional technical data for more information. Units with a profile length over 6300 mm consist of two profiles where the joint between the two profiles must be adequately supported on both sides.

Definition of Forces

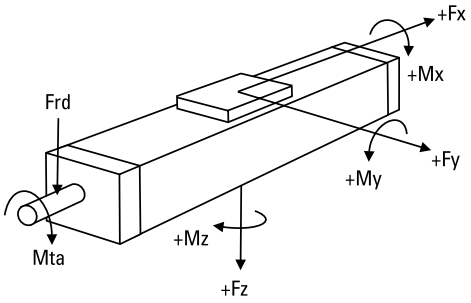

WM60D

Ball Screw Drive, Ball Guide, Double Ball Nuts

Dimensions	Projection
METRIC	

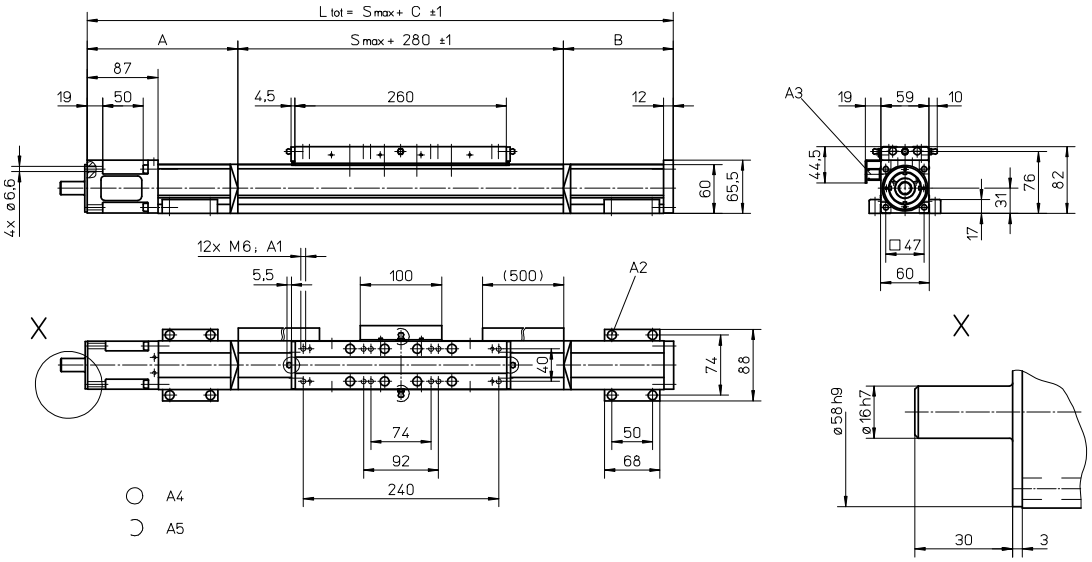

A1: depth 11
A2: socket cap screw ISO4762-M6×20 8.8
A3: ENF inductive sensor rail kit (optional - see page 172)
A4: tapered lubricating nipple to DIN71412 AM6 on fixed-bearing side as standard feature
A5: can be changed over to one of the three alternative lubricating points by the customer

Stroke length (Smax) [mm]	A [mm]	B [mm]	C [mm]
0 - 695 (0 - 505)	115	65	460 (650)
696 - 1335 (506 - 1145)	165	115	560 (750)
1336 - 2075 (1146 - 1885)	185	135	600 (790)
2076 - 2780 (1886 - 2590)	210	160	650 (840)

Values between brackets = for units with long carriage

Stroke length (Smax) [mm]	A [mm]	B [mm]	C [mm]
2781 - 3545 (2591 - 3355)	230	180	690 (880)
3546 - 4285 (3366 - 4095)	250	200	730 (920)
4286 - 5015 (4096 - 4825)	275	225	780 (970)
5016 - 11000 (4826 - 10810)	contact customer service		

Performance Specifications
for Units with Single Long Carriage (L)

Parameter		WM60D
Stroke length (Smax), maximum screw lead 5, 20 mm screw lead 50 mm	[mm]	 11000 4810
Total length (L tot), maximum screw lead 5, 20 mm screw lead 50 mm	[mm]	 12320 5780
Carriage length	[mm]	450
Dynamic load torque (My), maximum	[Nm]	500
Dynamic load torque (Mz), maximum	[Nm]	500
Weight	[kg]	3,1

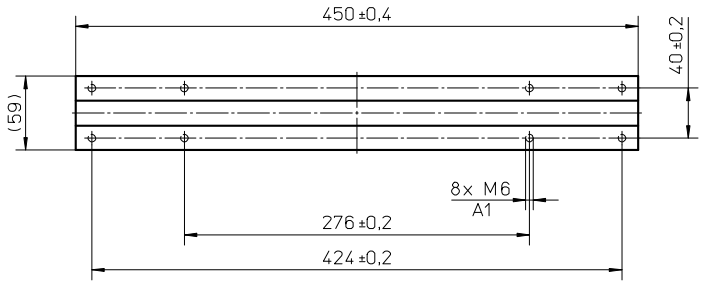

A1: depth 11

Performance Specifications
for Units with Double Standard Carriage (Z)

Parameter		WM60D
Stroke length (Smax), maximum screw lead 5, 20 mm screw lead 50 mm	[mm]	 10665 4665
Total length (L tot), maximum screw lead 5, 20 mm screw lead 50 mm	[mm]	 12130 5780
Minimum distance between carriages (L_A)	[mm]	335
Dynamic load (Fy), maximum	[N]	4000
Dynamic load (Fz), maximum	[N]	4000
Dynamic load torque (My), maximum	[Nm]	L_A[1] × 2
Dynamic load torque (Mz), maximum	[Nm]	L_A[1] × 2
Force required to move second carriage	[N]	20
Total length (L tot)	[mm]	Smax + C + L_A

[1] Value in mm

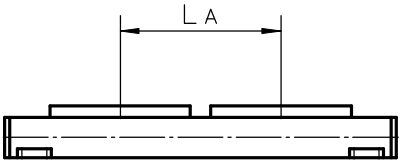

WM60S

Ball Screw Drive, Ball Guide, Single Ball Nut, Short Carriage

» Ordering key - see page 187
» Accessories - see page 131
» Additional data - see page 178

General Specifications

Parameter	WM60S
Profile size (w × h) [mm]	60 × 60
Type of screw	ball screw with single nut
Carriage sealing system	self-adjusting plastic cover band
Screw supports	included in all units that require screw supports
Lubrication	central lubrication of all parts that require lubrication
Included accessories	4 × mounting clamps

Performance Specifications

for Units with Single Short Carriage (N)[1]

Parameter		WM60S
Stroke length (Smax), maximum	[mm]	
screw lead 5, 20 mm		10390
screw lead 50 mm		5000
Total length (L tot), maximum	[mm]	
screw lead 5, 20 mm		11400
screw lead 50 mm		5650
Linear speed, maximum	[m/s]	2,5
Acceleration, maximum	[m/s²]	10
Repeatability	[± mm]	0,02
Input speed, maximum	[rpm]	3000
Operation temperature limits	[°C]	0 – 80
Dynamic load (Fx), maximum	[N]	2800
Dynamic load (Fy), maximum	[N]	1400
Dynamic load (Fz), maximum	[N]	1400
Dynamic load torque (Mx), maximum	[Nm]	50
Dynamic load torque (My), maximum	[Nm]	100
Dynamic load torque (Mz), maximum	[Nm]	100
Drive shaft force (Frd), maximum	[N]	500
Drive shaft torque (Mta), maximum	[Nm]	35
Ball screw diameter (d_0)	[mm]	20
Ball screw lead (p)	[mm]	5, 20, 50
Weight	[kg]	
of unit with zero stroke		3,80
of every 100 mm of stroke		0,65
of each carriage		1,00

[1] See next page for deviating values of units with other carriage types.

Carriage Idle Torque (M idle) [Nm]

Input speed [rpm]	Screw lead [mm]		
	p = 5	p = 20	p = 50
150	0,7	1,0	1,4
1500	1,1	1,6	2,0
3000	1,5	1,8	2,2

M idle = the input torque needed to move the carriage with no load on it.

Deflection of the Profile

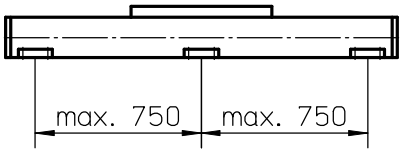

A mounting clamp must be installed at least every 750 mm to be able to operate at maximum load. Less clamps may be required if less load is being operated, see the additional technical data for more information. Units with a profile length over 6300 mm consist of two profiles where the joint between the two profiles must be adequately supported on both sides.

Definition of Forces

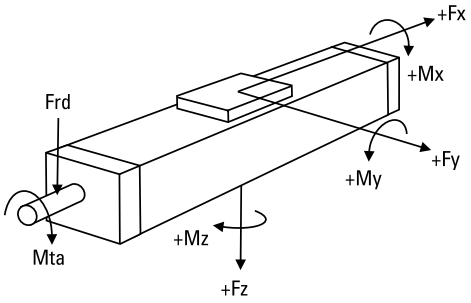

WM60S

Ball Screw Drive, Ball Guide, Single Ball Nut, Short Carriage

Dimensions	Projection
METRIC	

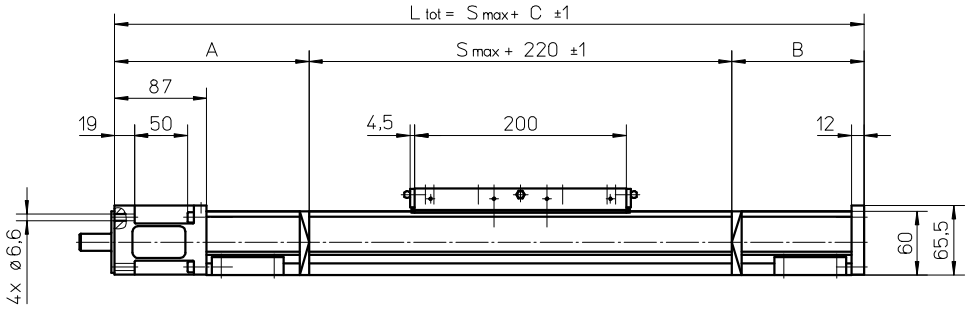

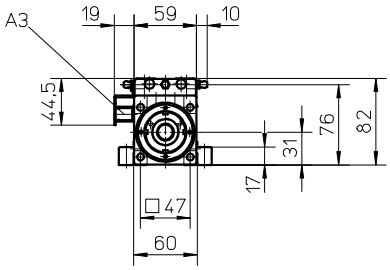

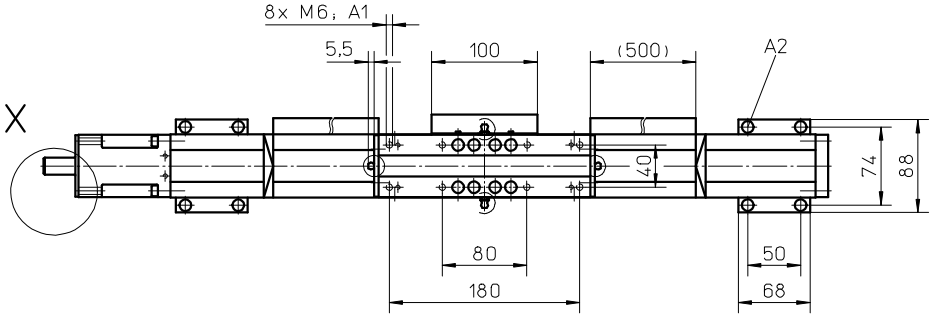

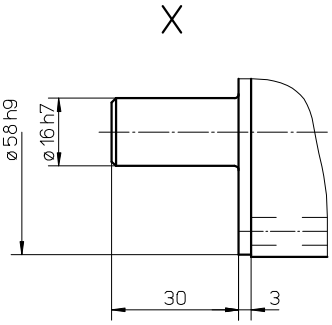

A1: depth 11
A2: socket cap screw ISO4762-M6×20 8.8
A3: ENF inductive sensor rail kit (optional - see page 172)

A4: tapered lubricating nipple to DIN71412 AM6 on fixed-bearing side as standard feature
A5: can be changed over to one of the three alternative lubricating points by the customer

Stroke length (Smax) [mm]	A [mm]	B [mm]	C [mm]
0 - 580	95	20	335
581 - 1140	110	60	390
1141 - 1805	130	80	430
1806 - 2460	155	105	480

Stroke length (Smax) [mm]	A [mm]	B [mm]	C [mm]
2461 - 3125	175	125	520
3126 - 3780	200	150	570
3781 - 4445	220	170	610
4446 - 5000	240	190	650
5001 - 10390	contact customer service		

Performance Specifications

for Units with Double Short Carriage (Y)

Parameter		WM60S
Stroke length (Smax), maximum screw lead 5, 20 mm screw lead 50 mm	[mm]	 10135 4745
Total length (L tot), maximum screw lead 5, 20 mm screw lead 50 mm	[mm]	 11400 5650
Minimum distance between carriages (L_A)	[mm]	255
Dynamic load (Fy), maximum	[N]	2800
Dynamic load (Fz), maximum	[N]	2800
Dynamic load torque (My), maximum	[Nm]	L_A[1] × 1,4
Dynamic load torque (Mz), maximum	[Nm]	L_A[1] × 1,4
Force required to move second carriage	[N]	18
Total length (L tot)	[mm]	Smax + C + L_A

[1] Value in mm

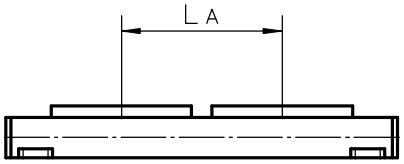

WM60X

Ball Screw Drive, Ball Guide, Left/Right Moving Carriages

» Ordering key - see page 187
» Accessories - see page 131
» Additional data - see page 178

General Specifications

Parameter	WM60X
Profile size (w × h) [mm]	60 × 60
Type of screw	ball screw with double nut
Carriage sealing system	self-adjusting plastic cover band
Screw supports	included in all units that require screw supports
Lubrication	central lubrication of all parts that require lubrication
Included accessories	4 × mounting clamps

Performance Specifications

for Units with Single Standard Carriage (N)[1]

Parameter		WM60X
Stroke length (Smax), maximum	[mm]	10340
Linear speed, maximum	[m/s]	0,25
Acceleration, maximum	[m/s²]	20
Repeatability	[± mm]	0,01
Input speed, maximum	[rpm]	3000
Operation temperature limits	[°C]	0 – 80
Dynamic load (Fx), maximum	[N]	4000
Dynamic load (Fy), maximum	[N]	2000
Dynamic load (Fz), maximum	[N]	2000
Dynamic load torque (Mx), maximum	[Nm]	100
Dynamic load torque (My), maximum	[Nm]	200
Dynamic load torque (Mz), maximum	[Nm]	200
Drive shaft force (Frd), maximum	[N]	500
Drive shaft torque (Mta), maximum	[Nm]	35
Ball screw diameter (d_0)	[mm]	20
Ball screw lead (p)	[mm]	5
Weight	[kg]	
of unit with zero stroke		10,33
of every 100 mm of stroke		0,65
of each carriage		1,99

[1] See next page for deviating values of units with other carriage types.

Carriage Idle Torque (M idle) [Nm]

Input speed [rpm]	Screw lead [mm]
	p = 5
150	1,6
1500	2,8
3000	3,6

M idle = the input torque needed to move the carriage with no load on it.

Deflection of the Profile

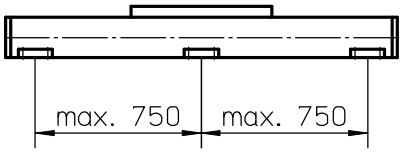

A mounting clamp must be installed at least every 750 mm to be able to operate at maximum load. Less clamps may be required if less load is being operated, see the additional technical data for more information. Units with a profile length over 6300 mm consist of two profiles where the joint between the two profiles must be adequately supported on both sides.

Definition of Forces

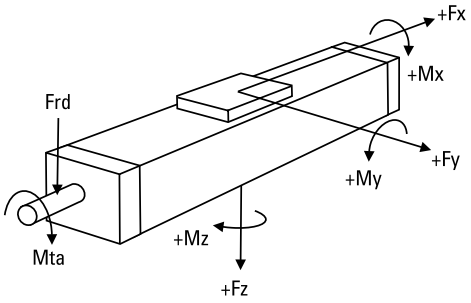

WM60X

Ball Screw Drive, Ball Guide, Left/Right Moving Carriages

Dimensions	Projection
METRIC	

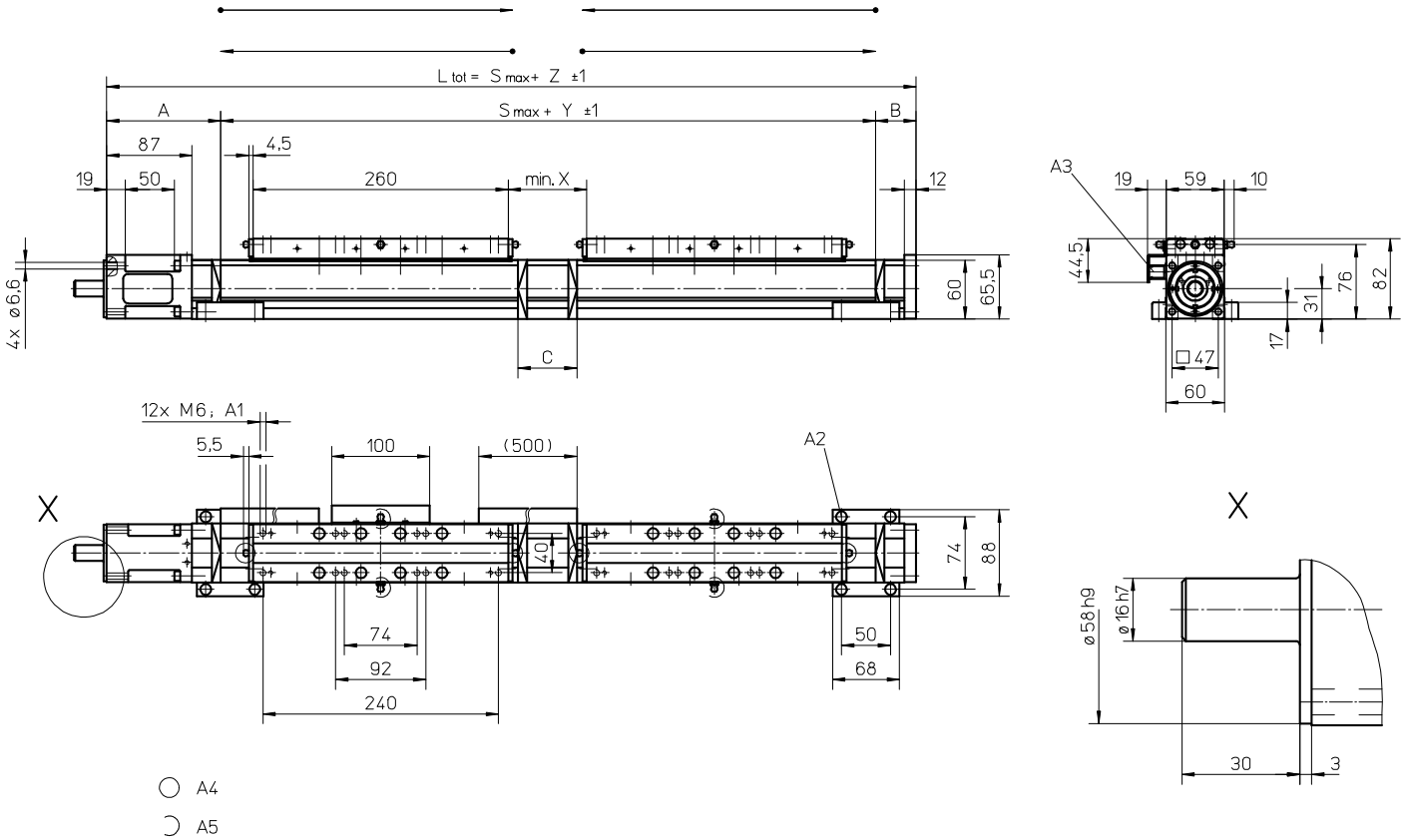

A1: depth 11
A2: socket cap screw ISO4762-M6×20 8.8
A3: ENF inductive sensor rail kit (optional - see page 172)
A4: tapered lubricating nipple to DIN71412 AM6 on fixed-bearing side as standard feature
A5: can be changed over to one of the three alternative lubricating points by the customer

Stroke length (Smax) [mm]	A [mm]	B [mm]	C [mm]	X [mm]	Y [mm]	Z [mm]
0 - 1390 (0 - 1200)	115	65	60	80	620	800
1391 - 2670 (1201 - 2480)	165	115	210	230	770	1050
2671 - 4150 (2481 - 3960)	185	135	250	270	810	1130
4151 - 5560 (3961 - 5370)	210	160	300	320	860	1230
5561 - 10340 (5371 - 10150)	contact customer sevice					

Values between brackets = for units with long carriage

Performance Specifications

for Units with Single Long Carriage (L)

Parameter		WM60X
Carriage length	[mm]	450
Dynamic load torque (My), maximum	[Nm]	500
Dynamic load torque (Mz), maximum	[Nm]	500
Weight	[kg]	3,1

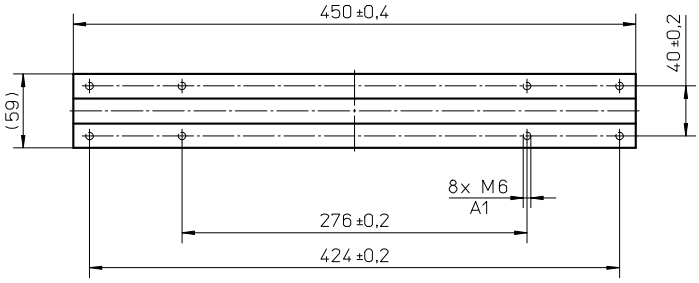

A1: depth 11

WM80D

Ball Screw Drive, Ball Guide, Double Ball Nuts

» Ordering key - see page 187
» Accessories - see page 131
» Additional data - see page 178

General Specifications

Parameter	WM80D
Profile size (w × h) [mm]	80 × 80
Type of screw	ball screw with double nuts
Carriage sealing system	self-adjusting plastic cover band
Screw supports	included in all units that require screw supports
Lubrication	central lubrication of all parts that require lubrication
Included accessories	4 × mounting clamps

Performance Specifications

for Units with Single Standard Carriage (N)[1]

Parameter		WM80D
Stroke length (Smax), maximum screw lead 5, 10, 20 mm screw lead 50 mm	[mm]	 11000 4965
Total length (L tot), maximum screw lead 5, 10, 20 mm screw lead 50 mm	[mm]	 12075 5780
Linear speed, maximum	[m/s]	2,5
Acceleration, maximum	[m/s²]	20
Repeatability	[± mm]	0,01
Input speed, maximum	[rpm]	3000
Operation temperature limits	[°C]	0 – 80
Dynamic load (Fx), maximum	[N]	5000
Dynamic load (Fy), maximum	[N]	3000
Dynamic load (Fz), maximum	[N]	3000
Dynamic load torque (Mx), maximum	[Nm]	350
Dynamic load torque (My), maximum	[Nm]	300
Dynamic load torque (Mz), maximum	[Nm]	300
Drive shaft force (Frd), maximum	[N]	700
Drive shaft torque (Mta), maximum	[Nm]	55
Ball screw diameter (d_0)	[mm]	25
Ball screw lead (p)	[mm]	5, 10, 20, 50
Weight of unit with zero stroke of every 100 mm of stroke of each carriage	[kg]	 11,57 1,08 4,26

[1] See next page for deviating values of units with other carriage types.

Carriage Idle Torque (M idle) [Nm]

Input speed [rpm]	Screw lead [mm]			
	p = 5	p = 10	p = 20	p = 50
150	1,1	1,5	1,8	2,3
1500	1,7	2.1	2,3	3,0
3000	2,1	2,5	2,6	3,6

M idle = the input torque needed to move the carriage with no load on it.

Deflection of the Profile

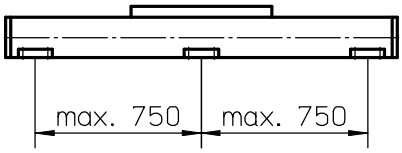

A mounting clamp must be installed at least every 750 mm to be able to operate at maximum load. Less clamps may be required if less load is being operated, see the additional technical data for more information. Units with a profile length over 6300 mm consist of two profiles where the joint between the two profiles must be adequately supported on both sides.

Definition of Forces

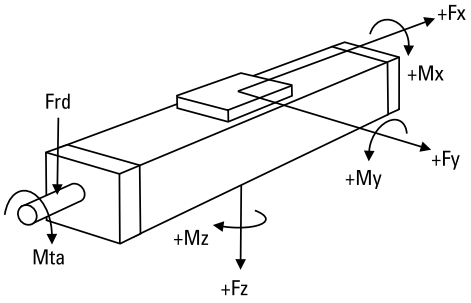

WM80D

Ball Screw Drive, Ball Guide, Double Ball Nuts

Dimensions	Projection
METRIC	

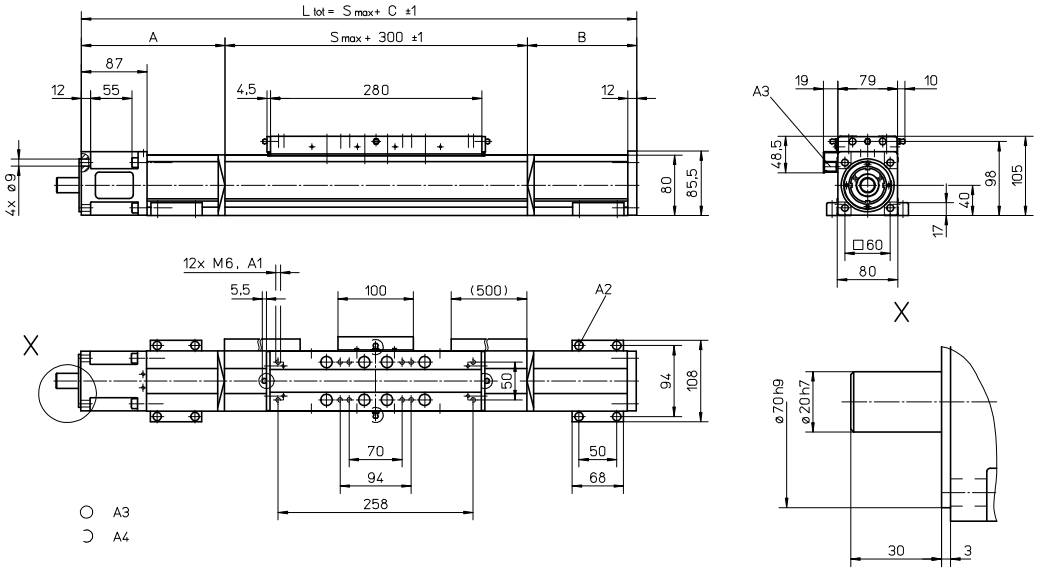

A1: depth 12 mm
A2: socket cap screw ISO4762-M6×20 8.8
A3: ENF inductive sensor rail kit (optional - see page 172)
A4: tapered lubricating nipple to DIN71412 AM6 on fixed-bearing side as standard feature
A5: can be changed over to one of three alternative lubrication points by customer

Stroke length (Smax) [mm]	A [mm]	B [mm]	C [mm]
0 - 780 (0 - 610)	120	80	500 (670)
781 - 1535 (611 - 1365)	170	125	595 (765)
1536 - 2375 (1366 - 2205)	190	145	635 (805)
2376 - 3205 (2206 - 3035)	215	170	685 (855)

Values between brackets = for units with long carriage

Stroke length (Smax) [mm]	A [mm]	B [mm]	C [mm]
3206 - 4045 (3036 - 3875)	235	190	725 (895)
4046 - 4885 (3876 - 4715)	255	210	765 (935)
4886 - 5000 (4716 - 4830)	280	235	815 (985)
5001 - 11000 (4717 - 10830)	contact customer service		

Performance Specifications
for Units with Single Long Carriage (L)

Parameter		WM80D
Stroke length (Smax), maximum screw lead 5, 10, 20 mm screw lead 50 mm	[mm]	 10830 4795
Total length (L tot), maximum screw lead 5, 10, 20 mm screw lead 50 mm	[mm]	 12075 5780
Carriage length	[mm]	450
Dynamic load torque (My), maximum	[Nm]	750
Dynamic load torque (Mz), maximum	[Nm]	750
Weight	[kg]	6,4

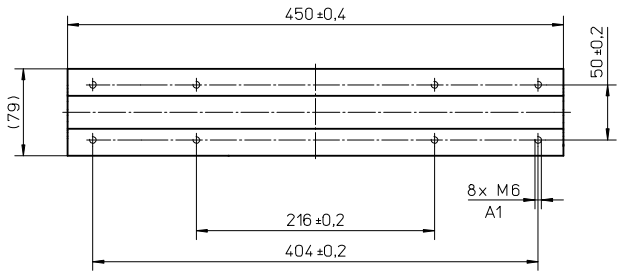

A1: depth 12 mm

Performance Specifications
for Units with Double Standard Carriage (Z)

Parameter		WM80D
Stroke length (Smax), maximum screw lead 5, 10, 20 mm screw lead 50 mm	[mm]	 10640 4655
Total length (L tot), maximum screw lead 5, 10, 20 mm screw lead 50 mm	[mm]	 12075 5780
Minimum distance between carriages (L_A)	[mm]	360
Dynamic load (Fy), maximum	[N]	6000
Dynamic load (Fz), maximum	[N]	6000
Dynamic load torque (My), maximum	[Nm]	L_A[1] × 3
Dynamic load torque (Mz), maximum	[Nm]	L_A[1] × 3
Force required to move second carriage	[N]	25
Total length (L tot)	[mm]	Smax + C + L_A

[1] Value in mm

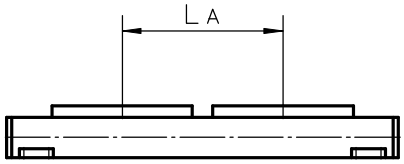

WM80S

Ball Screw Drive, Ball Guide, Singel Ball Nut, Short Carriage

» Ordering key - see page 187
» Accessories - see page 131
» Additional data - see page 178

General Specifications

Parameter	WM80S
Profile size (w × h) [mm]	80 × 80
Type of screw	ball screw with single nut
Carriage sealing system	self-adjusting plastic cover band
Screw supports	included in all units that require screw supports
Lubrication	central lubrication of all parts that require lubrication
Included accessories	4 × mounting clamps

Performance Specifications

for Units with Single Short Carriage (S)[1]

Parameter		WM80S
Stroke length (Smax), maximum screw lead 5, 10, 20 mm screw lead 50 mm	[mm]	 10540 5000
Total length (L tot), maximum screw lead 5, 10, 20 mm screw lead 50 mm	[mm]	 11495 5645
Linear speed, maximum	[m/s]	2,5
Acceleration, maximum	[m/s²]	20
Repeatability	[± mm]	0,02
Input speed, maximum	[rpm]	3000
Operation temperature limits	[°C]	0 – 80
Dynamic load (Fx), maximum	[N]	3500
Dynamic load (Fy), maximum	[N]	2100
Dynamic load (Fz), maximum	[N]	2100
Dynamic load torque (Mx), maximum	[Nm]	150
Dynamic load torque (My), maximum	[Nm]	180
Dynamic load torque (Mz), maximum	[Nm]	180
Drive shaft force (Frd), maximum	[N]	700
Drive shaft torque (Mta), maximum	[Nm]	55
Ball screw diameter (d_0)	[mm]	25
Ball screw lead (p)	[mm]	5, 10, 20, 50
Weight of unit with zero stroke of every 100 mm of stroke of each carriage	[kg]	 7,0 1,1 1,6

[1] See next page for deviating values of units with other carriage types.

Carriage Idle Torque (M idle) [Nm]

Input speed [rpm]	Screw lead [mm]			
	p = 5	p = 10	p = 20	p = 50
150	0,9	1,1	1,3	2,0
1500	1,3	1,5	1,8	2,4
3000	1,7	1,8	2,0	2,9

M idle = the input torque needed to move the carriage with no load on it.

Deflection of the Profile

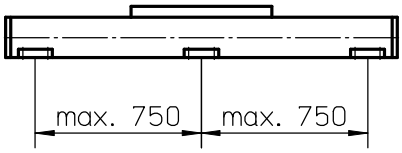

A mounting clamp must be installed at least every 750 mm to be able to operate at maximum load. Less clamps may be required if less load is being operated, see the additional technical data for more information. Units with a profile length over 6300 mm consist of two profiles where the joint between the two profiles must be adequately supported on both sides.

Definition of Forces

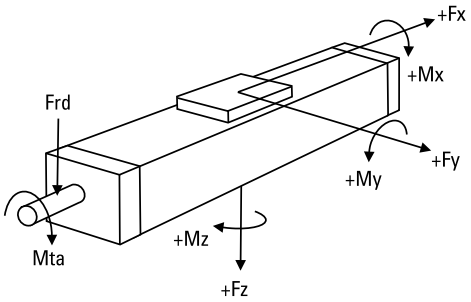

WM80S

Ball Screw Drive, Ball Guide, Singel Ball Nut, Short Carriage

Dimensions	Projection
METRIC	

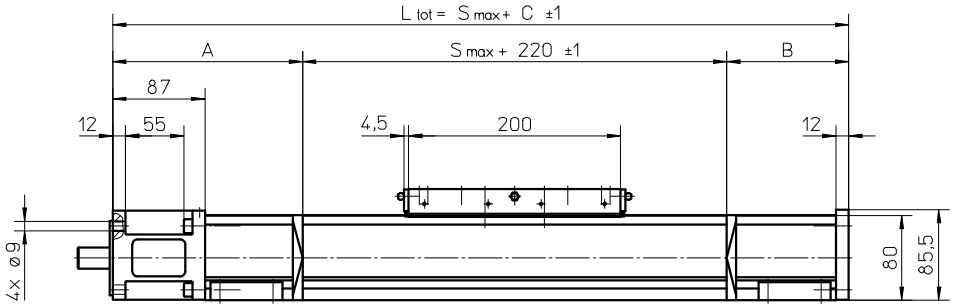

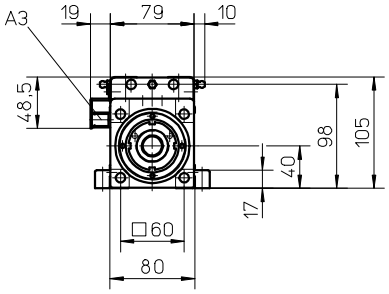

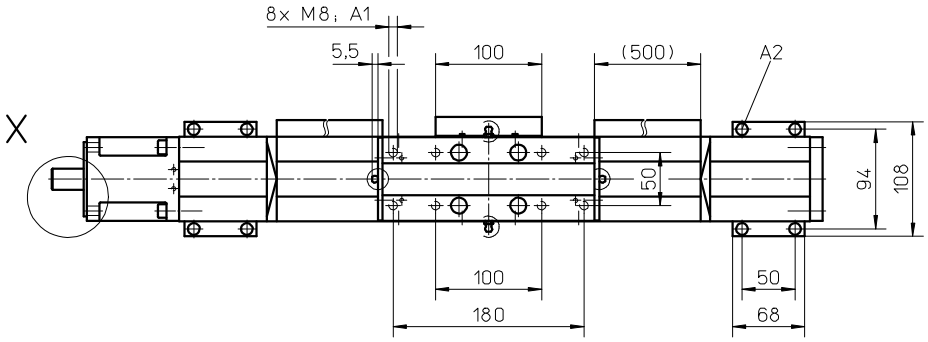

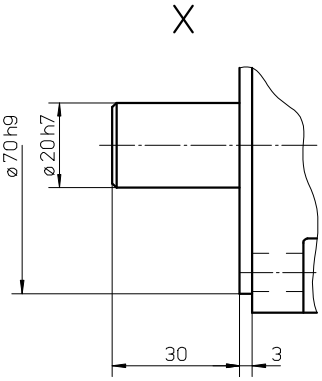

A4
A5

A1: depth 12 mm
A2: socket cap screw ISO4762-M6×20 8.8
A3: ENF inductive sensor rail kit (optional - see page 172)

A4: tapered lubricating nipple to DIN71412 AM6 on fixed-bearing side as standard feature
A5: can be changed over to one of three alternative lubrication points by customer

Stroke length (Smax) [mm]	A [mm]	B [mm]	C [mm]
0 - 680	95	35	350
681 - 1310	125	80	425
1311 - 2065	150	105	475
2066 - 2830	170	125	515
2831 - 3590	195	150	565
3591 - 4355	215	170	605
4356 - 5000	235	190	645

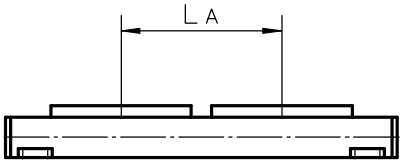

Performance Specifications

for Units with Double Short Carriage (Y)

Parameter		WM80S
Stroke length (Smax), maximum screw lead 5, 10, 20 mm screw lead 50 mm	[mm]	 10260 4720
Total length (L tot), maximum screw lead 5, 10, 20 mm screw lead 50 mm	[mm]	 11495 5645
Minimum distance between carriages (L_A)	[mm]	280
Dynamic load (Fy), maximum	[N]	4200
Dynamic load (Fz), maximum	[N]	4200
Dynamic load torque (My), maximum	[Nm]	L_A[1] × 2,1
Dynamic load torque (Mz), maximum	[Nm]	L_A[1] × 2,1
Force required to move second carriage	[N]	22,5
Total length (L tot)	[mm]	Smax + C + L_A

[1] Value in mm

WM120D

Ball Screw Drive, Ball Guide, Double Ball Nuts

» Ordering key - see page 187
» Accessories - see page 131
» Additional data - see page 178

General Specifications

Parameter	WM120D
Profile size (w × h) [mm]	120 × 120
Type of screw	ball screw with double nuts
Carriage sealing system	self-adjusting plastic cover band
Screw supports	included in all units that require screw supports
Lubrication	central lubrication of all parts that require lubrication
Included accessories	4 × mounting clamps

Performance Specifications

for Units with Single Standard Carriage (N)[1]

Parameter		WM120D
Stroke length (Smax), maximum screw lead 5, 10, 20 mm screw lead 40 mm	[mm]	 11000 4765
Total length (L tot), maximum screw lead 5, 10, 20 mm screw lead 40 mm	[mm]	 12415 5780
Linear speed, maximum	[m/s]	2,0
Acceleration, maximum	[m/s²]	20
Repeatability	[± mm]	0,01
Input speed, maximum	[rpm]	3000
Operation temperature limits	[°C]	0 – 80
Dynamic load (Fx), maximum screw lead 5, 10, 20 mm screw lead 40 mm	[N]	 12000 8000
Dynamic load (Fy), maximum	[N]	6000
Dynamic load (Fz), maximum	[N]	6000
Dynamic load torque (Mx), maximum	[Nm]	500
Dynamic load torque (My), maximum	[Nm]	600
Dynamic load torque (Mz), maximum	[Nm]	600
Drive shaft force (Frd), maximum	[N]	1000
Drive shaft torque (Mta), maximum	[Nm]	80
Ball screw diameter (d_0)	[mm]	32
Ball screw lead (p)	[mm]	5, 10, 20, 40
Weight of unit with zero stroke of every 100 mm of stroke of each carriage	[kg]	 25,91 1,93 9,25

[1] See next page for deviating values of units with other carriage types.

Carriage Idle Torque (M idle) [Nm]

Input speed [rpm]	Screw lead [mm]			
	p = 5	p = 10	p = 20	p = 40
150	1,4	2,0	2,3	2,4
1500	2,5	3,0	3,3	3,8
3000	3,0	3,7	4,0	4,3

M idle = the input torque needed to move the carriage with no load on it.

Deflection of the Profile

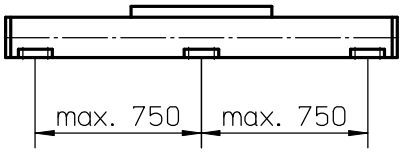

A mounting clamp must be installed at least every 750 mm to be able to operate at maximum load. Less clamps may be required if less load is being operated, see the additional technical data for more information. Units with a profile length over 5400 mm consist of two profiles where the joint between the two profiles must be adequately supported on both sides.

Definition of Forces

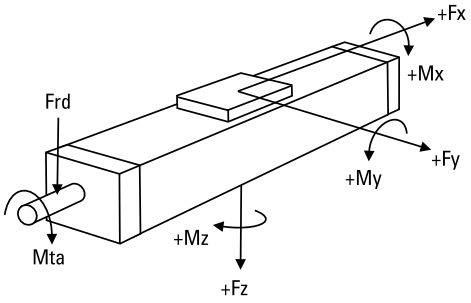

WM120D

Ball Screw Drive, Ball Guide, Double Ball Nuts

Dimensions	Projection
METRIC	

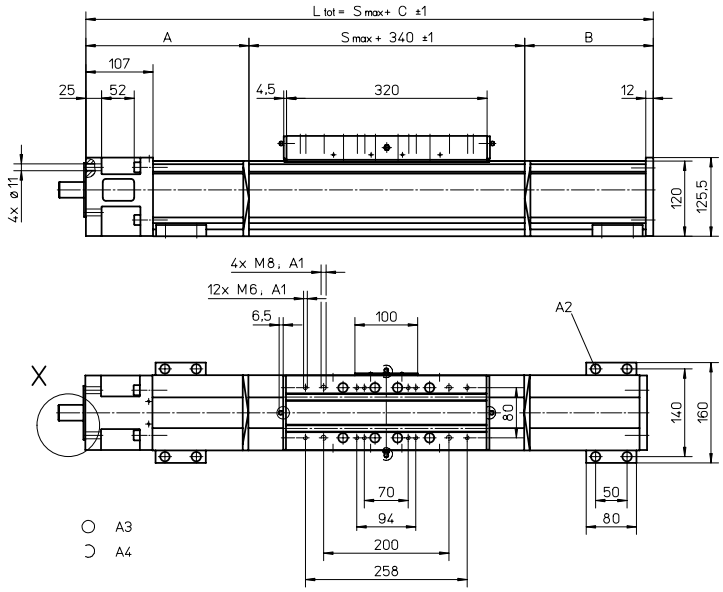

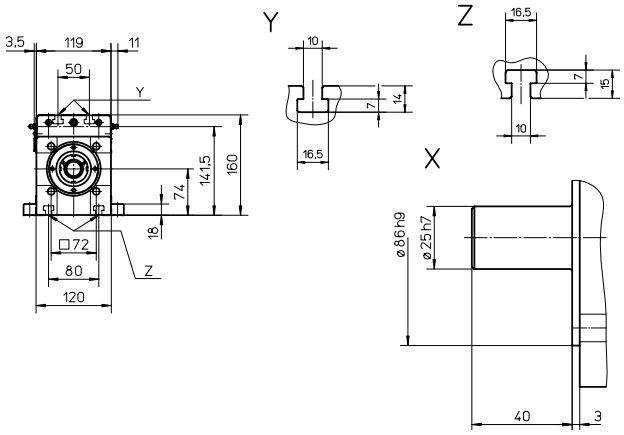

A1: depth 22
A2: socket cap screw ISO4762-M8×20 8.8
A3: tapered lubricating nipple to DIN71412 M8×1 on fixed-bearing side as standard feature
A4: can be changed over to one of the three alternative lubricating points by the customer

Stroke length (Smax) [mm]	A [mm]	B [mm]	C [mm]
0 - 890 (0 - 710)	155	100	595 (775)
891 - 1695 (711 - 1515)	225	170	735 (915)
1696 - 2625 (1516 - 2445)	260	205	805 (985)
2626 - 3555 (2446 - 3375)	295	240	875 (1055)

Values between brackets = for units with long carriage

Stroke length (Smax) [mm]	A [mm]	B [mm]	C [mm]
3556 - 4485 (3376 - 4305)	330	275	945 (1125)
4486 - 5000 (4306 - 4820)	365	310	1015 (1195)
5001 - 11000 (4307 - 10820)	contact customer service		

Performance Specifications
for Units with Single Long Carriage (L)

Parameter		WM120D
Stroke length (Smax), maximum	[mm]	
screw lead 5, 10, 20 mm		11000
screw lead 40 mm		4585
Total length (L tot), maximum	[mm]	
screw lead 5, 10, 20 mm		12595
screw lead 40 mm		5780
Carriage length	[mm]	500
Dynamic load torque (My), maximum	[Nm]	1500
Dynamic load torque (Mz), maximum	[Nm]	1500
Weight	[kg]	14,2

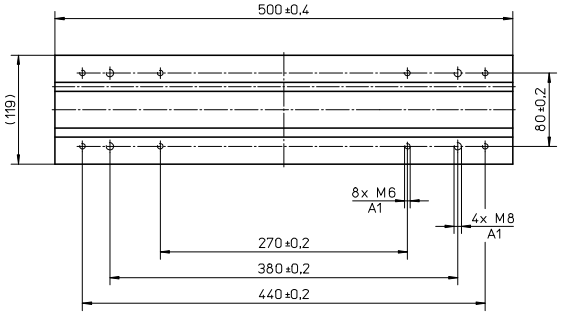

A1: depth 22

Performance Specifications
for Units with Double Standard Carriage (Z)

Parameter		WM120D
Stroke length (Smax), maximum	[mm]	
screw lead 5, 10, 20 mm		10730
screw lead 40 mm		4385
Total length (L tot), maximum	[mm]	
screw lead 5, 10, 20 mm		12595
screw lead 40 mm		5780
Minimum distance between carriages (L_A)	[mm]	450
Dynamic load (Fy), maximum	[N]	12000
Dynamic load (Fz), maximum	[N]	12000
Dynamic load torque (My), maximum	[Nm]	L_A[1] × 6
Dynamic load torque (Mz), maximum	[Nm]	L_A[1] × 6
Force required to move second carriage	[N]	30
Total length (L tot)	[mm]	Smax + C + L_A

[1] Value in mm

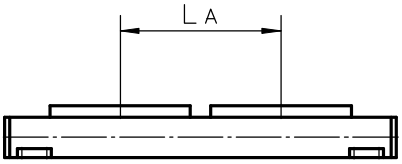

WV60

Ball Screw Drive, No Guides

» Ordering key - see page 188
» Accessories - see page 131
» Additional data - see page 178

General Specifications

Parameter	WV60
Profile size (w × h) [mm]	60 × 60
Type of screw	ball screw with double nut
Carriage sealing system	self-adjusting plastic cover band
Screw supports	included in all units that require screw supports
Lubrication	central lubrication of all parts that require lubrication
Included accessories	4 × mounting clamps

Performance Specifications

Parameter		WV60
Stroke length (Smax), maximum screw lead 5, 20 mm screw lead 50 mm	[mm]	 11000 5000
Total length (L tot), maximum screw lead 5, 20 mm screw lead 50 mm	[mm]	 12050 5700
Linear speed, maximum	[m/s]	2,5
Acceleration, maximum	[m/s²]	20
Repeatability	[± mm]	0,01
Input speed, maximum	[rpm]	3000
Operation temperature limits	[°C]	0 – 80
Dynamic load (Fx), maximum	[N]	4000
Dynamic load (Fy), maximum	[N]	0
Dynamic load (Fz), maximum	[N]	0
Dynamic load torque (Mx), maximum	[Nm]	0
Dynamic load torque (My), maximum	[Nm]	0
Dynamic load torque (Mz), maximum	[Nm]	0
Drive shaft force (Frd), maximum	[N]	500
Drive shaft torque (Mta), maximum	[Nm]	35
Ball screw diameter (d_0)	[mm]	20
Ball screw lead (p)	[mm]	5, 20, 50
Weight of unit with zero stroke of every 100 mm of stroke of each carriage	[kg]	 4,72 0,55 1,42

Carriage Idle Torque (M idle) [Nm]

Input speed [rpm]	Screw lead [mm]		
	p = 5	p = 20	p = 50
150	0,7	0,9	1,1
1500	1,3	1,5	1,5
3000	1,7	1,9	2,1

M idle = the input torque needed to move the carriage with no load on it.

Deflection of the Profile

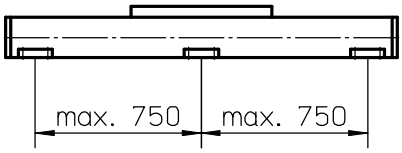

A mounting clamp must be installed at least every 750 mm to be able to operate at maximum load. Less clamps may be required if less load is being operated, see the additional technical data for more information. Units with a profile length over 6300 mm consist of two profiles where the joint between the two profiles must be adequately supported on both sides.

Definition of Forces

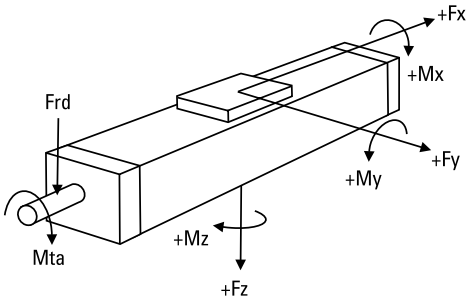

WV60

Ball Screw Drive, No Guides

Dimensions	Projection
METRIC	

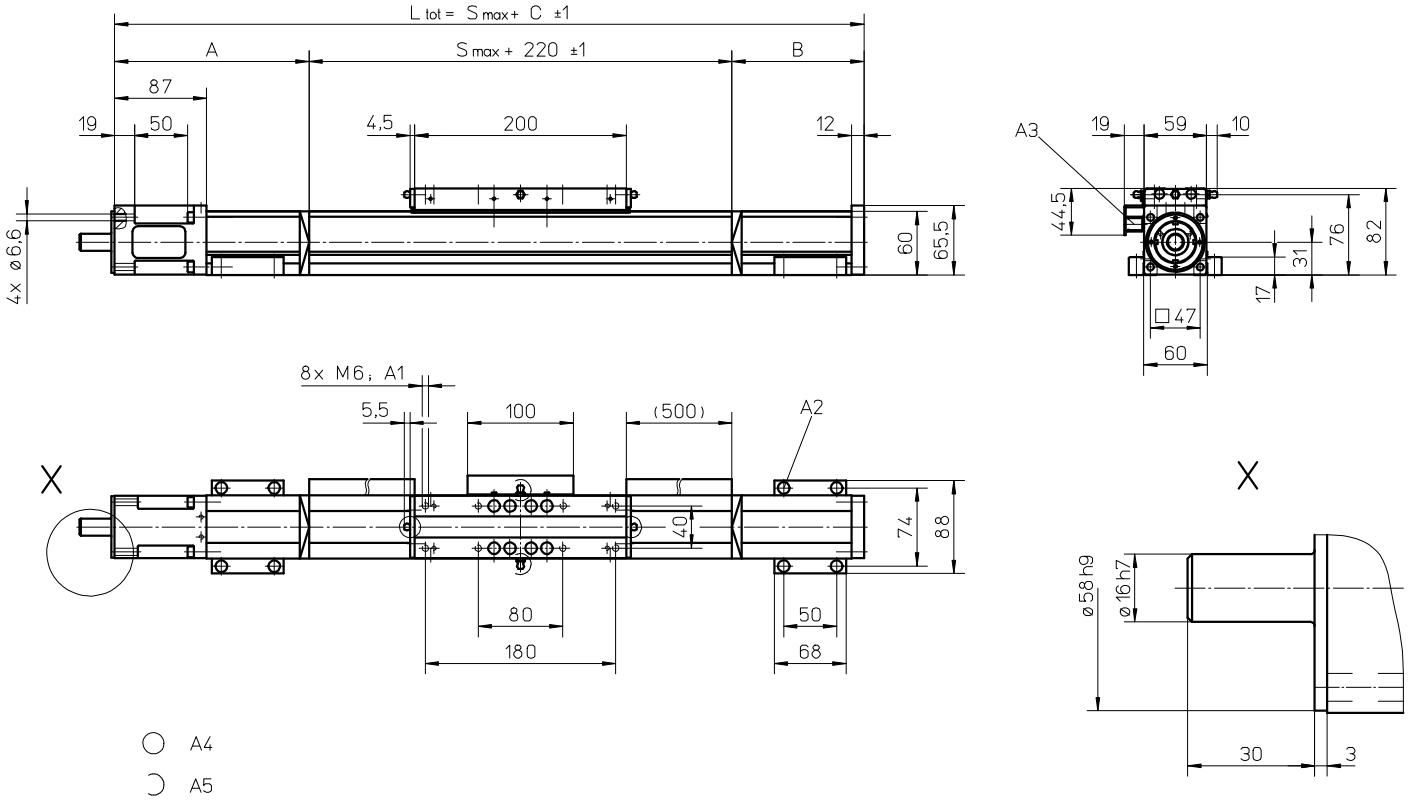

A1: depth 11
A2: socket cap screw ISO4762-M6×20 8.8
A3: ENF inductive sensor rail kit (optional - see page 172)

A4: tapered lubricating nipple to DIN71412 AM6 on fixed-bearing side as standard feature
A5: can be changed over to one of the three alternative lubricating points by the customer

Stroke length (Smax) [mm]	A [mm]	B [mm]	C [mm]
0 - 690	130	80	430
691 - 1415	155	105	480
1416 - 2155	175	125	520
2156 - 2885	200	150	570

Stroke length (Smax) [mm]	A [mm]	B [mm]	C [mm]
2886 - 3625	220	170	610
3626 - 4355	245	195	660
4256 - 5095	265	215	700
5096 - 11000	contact customer service		

WV80

Ball Screw Drive, No Guides

» Ordering key - see page 188
» Accessories - see page 131
» Additional data - see page 178

General Specifications

Parameter	WV80
Profile size (w × h) [mm]	80 × 80
Type of screw	ball screw with double nuts
Carriage sealing system	self-adjusting plastic cover band
Screw supports	included in all units that require screw supports
Lubrication	central lubrication of all parts that require lubrication
Included accessories	4 × mounting clamps

Performance Specifications

Parameter		WV80
Stroke length (Smax), maximum screw lead 5, 10, 20 mm screw lead 50 mm	[mm]	 11000 5000
Total length (L tot), maximum screw lead 5, 10, 20 mm screw lead 50 mm	[mm]	 11945 5635
Linear speed, maximum	[m/s]	2,5
Acceleration, maximum	[m/s²]	20
Repeatability	[± mm]	0,01
Input speed, maximum	[rpm]	3000
Operation temperature limits	[°C]	0 – 80
Dynamic load (Fx), maximum	[N]	5000
Dynamic load (Fy), maximum	[N]	0
Dynamic load (Fz), maximum	[N]	0
Dynamic load torque (Mx), maximum	[Nm]	0
Dynamic load torque (My), maximum	[Nm]	0
Dynamic load torque (Mz), maximum	[Nm]	0
Drive shaft force (Frd), maximum	[N]	700
Drive shaft torque (Mta), maximum	[Nm]	55
Ball screw diameter (d_0)	[mm]	25
Ball screw lead (p)	[mm]	5, 10, 20, 50
Weight of unit with zero stroke of every 100 mm of stroke of each carriage	[kg]	 7,95 0,99 2,25

Carriage Idle Torque (M idle) [Nm]

Input speed [rpm]	Screw lead [mm]			
	p = 5	p = 10	p = 20	p = 50
150	0,9	1,1	1,3	1,4
1500	1,6	1,9	2,1	2,3
3000	2,0	2,4	2,6	3,0

M idle = the input torque needed to move the carriage with no load on it.

Deflection of the Profile

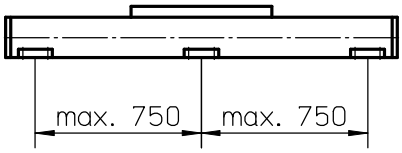

A mounting clamp must be installed at least every 750 mm to be able to operate at maximum load. Less clamps may be required if less load is being operated, see the additional technical data for more information. Units with a profile length over 6300 mm consist of two profiles where the joint between the two profiles must be adequately supported on both sides.

Definition of Forces

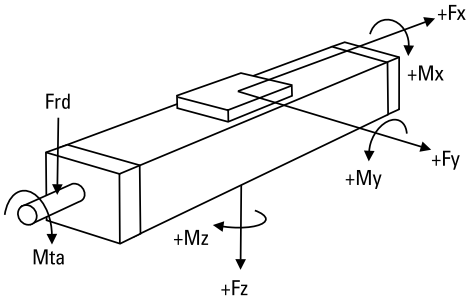

WV80

Ball Screw Drive, No Guides

Dimensions	Projection
METRIC	

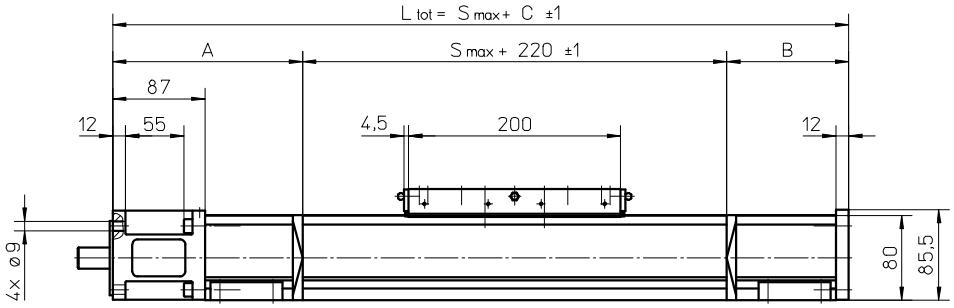

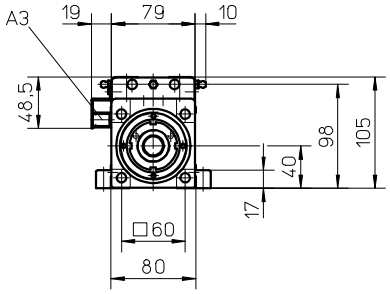

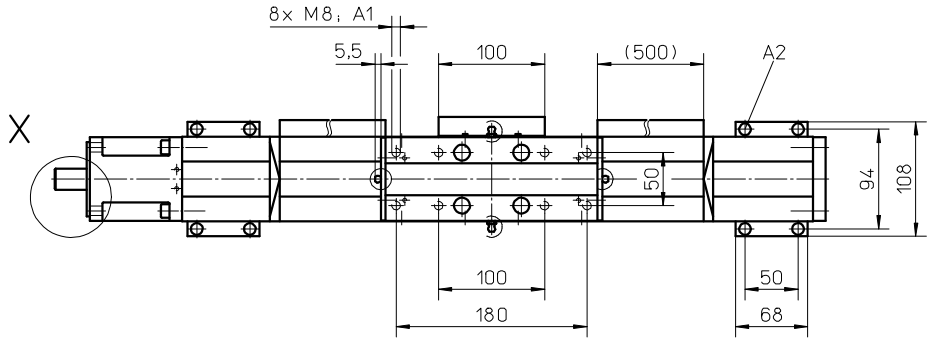

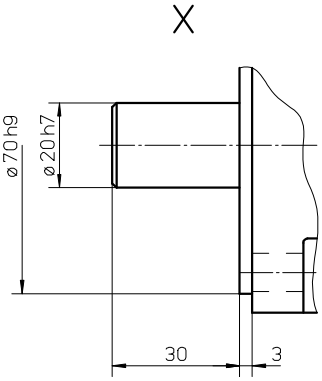

A4
A5

A1: depth 12 mm
A2: socket cap screw ISO4762-M6×20 8.8
A3: ENF inductive sensor rail kit (optional - see page 172)

A4: tapered lubricating nipple to DIN71412 AM6 on fixed-bearing side as standard feature
A5: can be changed over to one of three alternative lubrication points by customer

Stroke length (Smax) [mm]	A [mm]	B [mm]	C [mm]
0 - 775	125	50	395
776 - 1670	145	95	460
1671 - 2505	170	115	505
2506 - 3340	190	140	550

Stroke length (Smax) [mm]	A [mm]	B [mm]	C [mm]
3341 - 4175	210	160	590
4176 - 5015	235	180	635
5016 - 11000	contact customer service		

WV120

Ball Screw Drive, No Guides

» Ordering key - see page 188
» Accessories - see page 131
» Additional data - see page 178

General Specifications

Parameter	WV120
Profile size (w × h) [mm]	120 × 120
Type of screw	ball screw with double nuts
Carriage sealing system	self-adjusting plastic cover band
Screw supports	included in all units that require screw supports
Lubrication	central lubrication of all parts that require lubrication
Included accessories	4 × mounting clamps

Performance Specifications

Parameter		WV120
Stroke length (Smax), maximum screw lead 5, 10, 20 mm screw lead 40 mm	[mm]	 11000 5000
Total length (L tot), maximum screw lead 5, 10, 20 mm screw lead 40 mm	[mm]	 12260 5845
Linear speed, maximum	[m/s]	2,0
Acceleration, maximum	[m/s²]	20
Repeatability	[± mm]	0,01
Input speed, maximum	[rpm]	3000
Operation temperature limits	[°C]	0 – 80
Dynamic load (Fx), maximum screw lead 5, 10, 20 mm screw lead 40 mm	[N]	 12000 8000
Dynamic load (Fy), maximum	[N]	0
Dynamic load (Fz), maximum	[N]	0
Dynamic load torque (Mx), maximum	[Nm]	0
Dynamic load torque (My), maximum	[Nm]	0
Dynamic load torque (Mz), maximum	[Nm]	0
Drive shaft force (Frd), maximum	[N]	1000
Drive shaft torque (Mta), maximum	[Nm]	80
Ball screw diameter (d_0)	[mm]	32
Ball screw lead (p)	[mm]	5, 10, 20, 40
Weight of unit with zero stroke of every 100 mm of stroke of each carriage	[kg]	 18,10 1,94 4,75

Carriage Idle Torque (M idle) [Nm]

Input speed [rpm]	Screw lead [mm]			
	p = 5	p = 10	p = 20	p = 40
150	1,0	1,1	1,4	1,5
1500	2,1	2,2	2,5	2,8
3000	2,4	2,6	3,0	3,5

M idle = the input torque needed to move the carriage with no load on it.

Deflection of the Profile

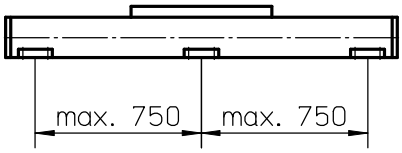

A mounting clamp must be installed at least every 750 mm to be able to operate at maximum load. Less clamps may be required if less load is being operated, see the additional technical data for more information. Units with a profile length over 5400 mm consist of two profiles where the joint between the two profiles must be adequately supported on both sides.

Definition of Forces

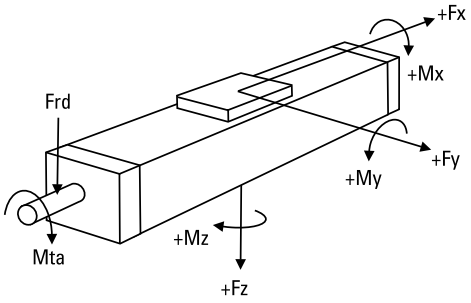

WV120

Ball Screw Drive, No Guides

Dimensions	Projection
METRIC	

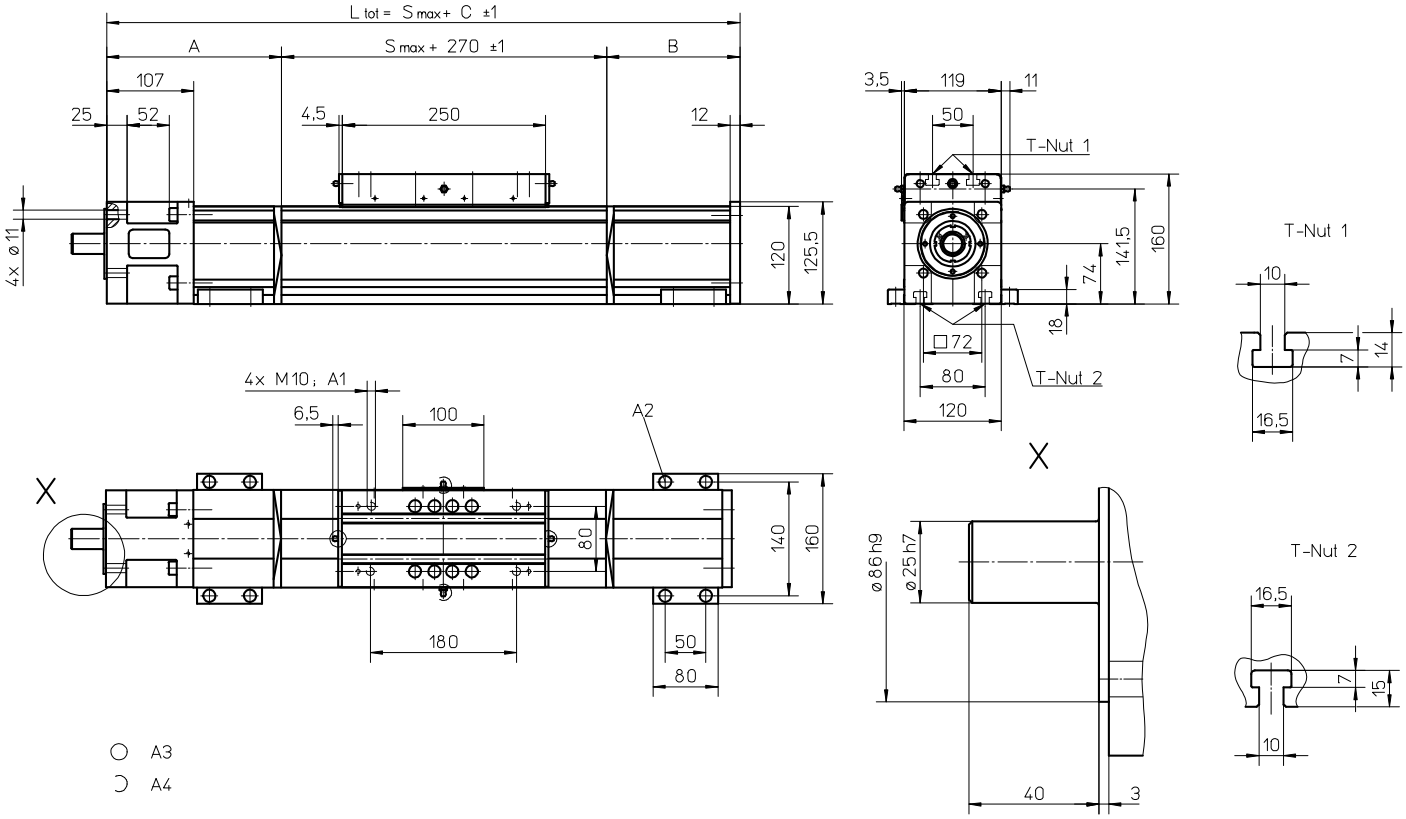

A1: depth 22
A2: socket cap screw ISO4762-M8×20 8.8

A3: tapered lubricating nipple to DIN71412 M8×1 on fixed-bearing side as standard feature
A4: can be changed over to one of the three alternative lubricating points by the customer

Stroke length (Smax) [mm]	A [mm]	B [mm]	C [mm]
0 - 940	145	50	465
941 - 1860	180	120	570
1861 - 2790	215	155	640
2791 - 3720	250	190	710

Stroke length (Smax) [mm]	A [mm]	B [mm]	C [mm]
3721 - 4650	285	225	780
4651 - 5000	320	255	845
5001 - 11000	contact customer service		

MLSM60D

Ball Screw Drive, Ball Guide

» Ordering key - see page 189
» Accessories - see page 131
» Additional data - see page 178

General Specifications

Parameter	MLSM60D
Profile size (w × h) [mm]	160 × 65
Type of screw	ball screw with double nuts
Carriage sealing system	plastic cover band
Screw supports	included in all units that require screw supports
Lubrication	central lubrication of all parts that require lubrication
Included accessories	4 × mounting clamps

Performance Specifications

for Units with Single Standard Carriage (N)[1]

Parameter		MLSM60D
Stroke length (Smax), maximum	[mm]	4985
Total length (L tot), maximum	[mm]	5700
Linear speed, maximum	[m/s]	2,5
Acceleration, maximum	[m/s²]	20
Repeatability	[± mm]	0,01
Input speed, maximum	[rpm]	3000
Operation temperature limits	[°C]	0 – 80
Dynamic load (Fx), maximum	[N]	5000
Dynamic load (Fy), maximum	[N]	6000
Dynamic load (Fz), maximum	[N]	6000
Dynamic load torque (Mx), maximum	[Nm]	400
Dynamic load torque (My), maximum	[Nm]	460
Dynamic load torque (Mz), maximum	[Nm]	460
Drive shaft force (Frd), maximum	[N]	350
Drive shaft torque (Mta), maximum	[Nm]	60
Ball screw diameter (d_0)	[mm]	25
Ball screw lead (p)	[mm]	5, 10, 20, 50
Weight	[kg]	
of unit with zero stroke		14,40
of every 100 mm of stroke		1,65
of each carriage		5,70

[1] See next page for deviating values of units with other carriage types.

Carriage Idle Torque (M idle) [Nm]

Input speed [rpm]	Screw lead [mm]			
	p = 5	p = 10	p = 20	p = 50
150	1,0	1,6	1,9	2,7
1500	1,6	2,2	2,3	3,4
3000	2,0	2,6	2,6	4,0

M idle = the input torque needed to move the carriage with no load on it.

Deflection of the Profile

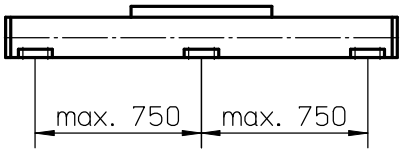

A mounting clamp must be installed at least every 750 mm to be able to operate at maximum load. Less clamps may be required if less load is being operated, see the additional technical data for more information.

Definition of Forces

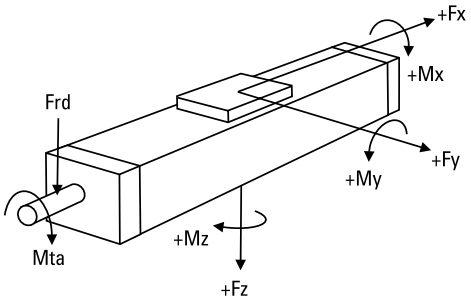

MLSM60D

Ball Screw Drive, Ball Guide

Dimensions	Projection
METRIC	

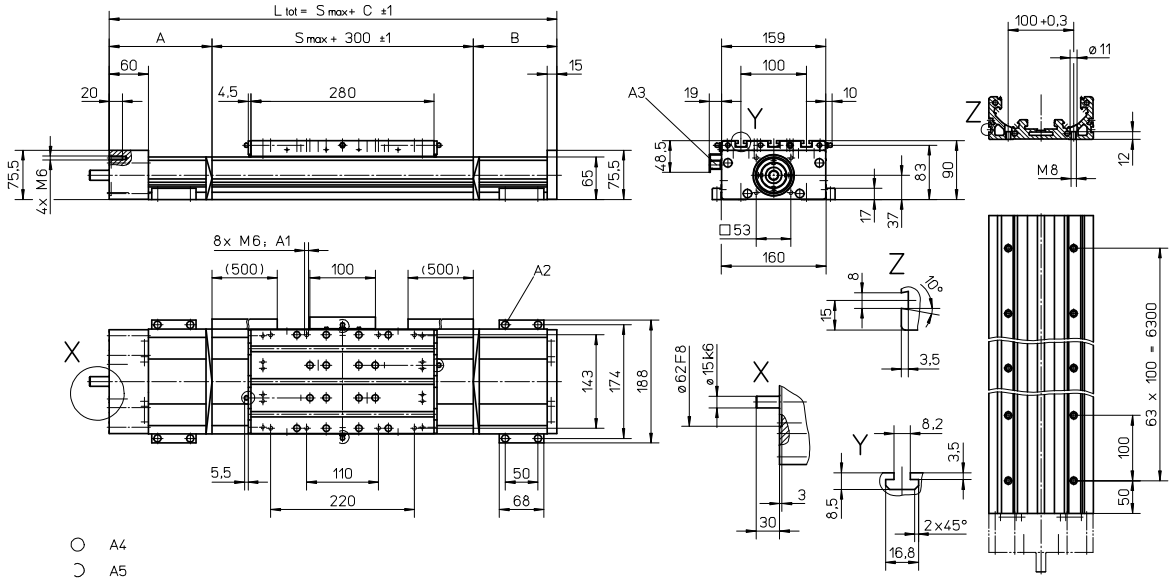

A1: depth 10
A2: socket cap screw ISO4762-M6×20 8.8
A3: ENF inductive sensor rail kit (optional - see page 172)
A4: tapered lubricating nipple to DIN71412 AM6 on fixed-bearing side as standard feature
A5: can be changed over to one of the three alternative lubricating points by the customer

Stroke length (Smax) [mm]	A [mm]	B [mm]	C [mm]
0 - 750 (0 - 580)	90	45	435 (605)
751 - 1220 (581 - 1050)	105	90	495 (665)
1221 - 1980 (1051 - 1810)	125	110	535 (705)
1981 - 2730 (1811 - 2560)	150	135	585 (765)

Stroke length (Smax) [mm]	A [mm]	B [mm]	C [mm]
2731 - 3490 (2561 - 3320)	170	155	625 (795)
3491 - 4240 (3321 - 4070)	195	180	675 (845)
4241 - 5000 (4071 - 4830)	215	200	715 (885)
5001 - 5500 (4831 - 5330)	235	220	755 (925)

Values between brackets = for units with long carriage

Performance Specifications
for Units with Single Long Carriage (L)

Parameter		MLSM60D
Stroke length (Smax), maximum	[mm]	4815
Total length (L tot), maximum	[mm]	5700
Carriage length	[mm]	450
Dynamic load torque (My), maximum	[Nm]	940
Dynamic load torque (Mz), maximum	[Nm]	940
Weight	[kg]	6,5

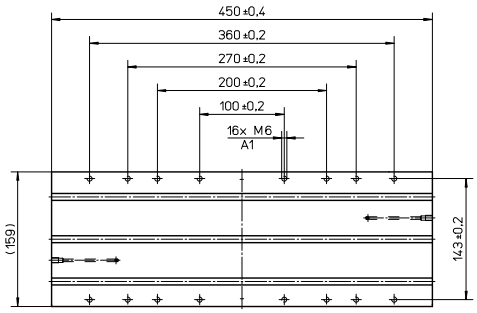

A1: depth 10

Performance Specifications
for Units with Double Standard Carriage (Z)

Parameter		MLSM60D
Stroke length (Smax), maximum	[mm]	4665
Total length (L tot), maximum	[mm]	5700
Minimum distance between carriages (L_A)	[mm]	320
Dynamic load (Fy), maximum	[N]	12000
Dynamic load (Fz), maximum	[N]	12000
Dynamic load torque (My), maximum	[Nm]	L_A[1] × 6
Dynamic load torque (Mz), maximum	[Nm]	L_A[1] × 6
Force required to move second carriage	[N]	27
Total length (L tot)	[mm]	Smax + C + L_A

[1] Value in mm

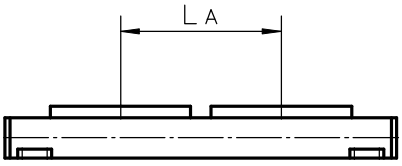

MLSM80D

Ball Screw Drive, Ball Guide

» Ordering key - see page 189
» Accessories - see page 131
» Additional data - see page 178

General Specifications

Parameter	MLSM80D
Profile size (w × h) [mm]	240 × 85
Type of screw	ball screw with double nuts
Carriage sealing system	plastic cover band
Screw supports	included in all units that require screw supports
Lubrication	central lubrication of all parts that require lubrication
Included accessories	4 × mounting clamps

Performance Specifications

for Units with Single Standard Carriage (N)[1]

Parameter		MLSM80D
Stroke length (Smax), maximum	[mm]	4810
Total length (L tot), maximum	[mm]	5700
Linear speed, maximum	[m/s]	2,0
Acceleration, maximum	[m/s²]	20
Repeatability	[± mm]	0,01
Input speed, maximum	[rpm]	3000
Operation temperature limits	[°C]	0 – 80
Dynamic load (Fx), maximum screw lead 5, 10, 20 mm screw lead 40 mm	[N]	 12000 8000
Dynamic load (Fy), maximum	[N]	8000
Dynamic load (Fz), maximum	[N]	8000
Dynamic load torque (Mx), maximum	[Nm]	780
Dynamic load torque (My), maximum	[Nm]	900
Dynamic load torque (Mz), maximum	[Nm]	900
Drive shaft force (Frd), maximum	[N]	700
Drive shaft torque (Mta), maximum	[Nm]	85
Ball screw diameter (d0)	[mm]	32
Ball screw lead (p)	[mm]	5, 10, 20, 40
Weight of unit with zero stroke of every 100 mm of stroke of each carriage	[kg]	 29,5 2,7 11,5

[1] See next page for deviating values of units with other carriage types.

Carriage Idle Torque (M idle) [Nm]

Input speed [rpm]	Screw lead [mm]			
	p = 5	p = 10	p = 20	p = 40
150	1,6	2,2	2,5	2,8
1500	2,7	3,2	3,4	4,0
3000	3,2	4,0	4,2	4,5

M idle = the input torque needed to move the carriage with no load on it.

Deflection of the Profile

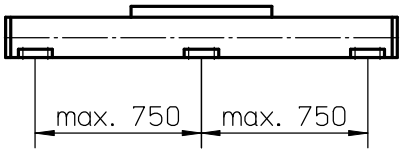

A mounting clamp must be installed at least every 750 mm to be able to operate at maximum load. Less clamps may be required if less load is being operated, see the additional technical data for more information.

Definition of Forces

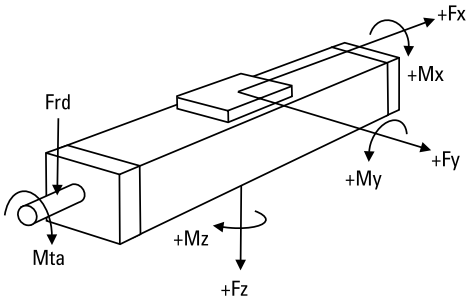

MLSM80D

Ball Screw Drive, Ball Guide

Dimensions	Projection
METRIC	

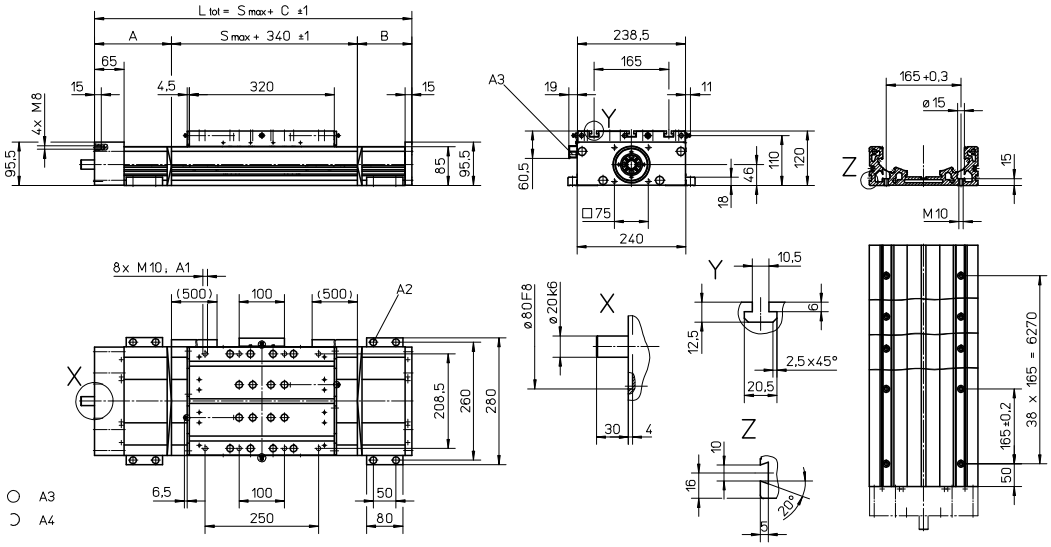

A1: depth 15
A2: socket cap screw ISO4762-M8×20 8.8
A3: ENF inductive sensor rail kit (optional - see page 172)
A4: tapered lubricating nipple to DIN71412 M8×1 on fixed-bearing side as standard feature
A5: can be changed over to one of the three alternative lubricating points by the customer

Stroke length (Smax) [mm]	A [mm]	B [mm]	C [mm]
0 - 750 (0 - 570)	100	90	530 (710)
751 - 1140 (571 - 960)	130	120	590 (770)
1141 - 1880 (961 - 1700)	160	150	650 (830)
1881 - 2620 (1701 - 2440)	190	180	710 (890)

Stroke length (Smax) [mm]	A [mm]	B [mm]	C [mm]
2621 - 3360 (2441 - 3180)	220	210	770 (950)
3361 - 4100 (3181 - 3920)	250	240	830 (1010)
4101 - 4840 (3921 - 4660)	280	270	890 (1070)
4841 - 5000 (4661 - 4820)	310	300	950 (1130)

Values between brackets = for units with long carriage

Performance Specifications
for Units with Single Long Carriage (L)

Parameter		MLSM80D
Stroke length (Smax), maximum	[mm]	4630
Total length (L tot), maximum	[mm]	5700
Carriage length	[mm]	500
Dynamic load torque (My), maximum	[Nm]	1750
Dynamic load torque (Mz), maximum	[Nm]	1750
Weight	[kg]	16

Performance Specifications
for Units with Double Standard Carriage (Z)

Parameter		MLSM80D
Stroke length (Smax), maximum	[mm]	4410
Total length (L tot), maximum	[mm]	5700
Minimum distance between carriages (L_A)	[mm]	400
Dynamic load (Fy), maximum	[N]	16000
Dynamic load (Fz), maximum	[N]	16000
Dynamic load torque (My), maximum	[Nm]	L_A[1] × 8
Dynamic load torque (Mz), maximum	[Nm]	L_A[1] ×8
Force required to move second carriage	[N]	35
Total length (L tot)	[mm]	Smax + C + L_A

[1] Value in mm

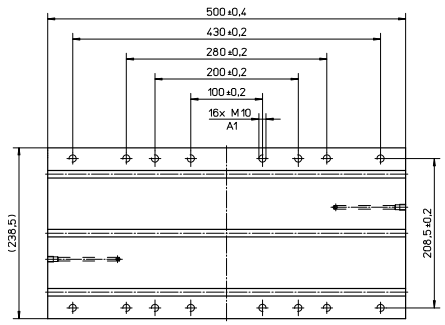

A1: depth 15

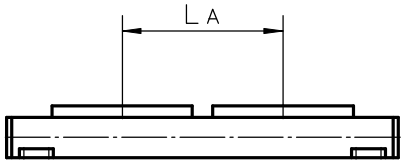

M55

Ball Screw Drive, Ball Guide

» Ordering key - see page 190
» Accessories - see page 131
» Additional data - see page 178

General Specifications

Parameter	M55
Profile size (w × h) [mm]	58 × 55
Type of screw	ball screw with single nut
Carriage sealing system	self-adjusting steel cover band
Screw supports	number of screw supports to be specified by customer at order
Lubrication	lubrication of ball screw
Included accessories	none

Performance Specifications

for Units with Single Standard Carriage (A)[1]

Parameter		M55
Stroke length (Smax), maximum	[mm]	3000
Linear speed, maximum	[m/s]	1,6
Acceleration, maximum	[m/s²]	8
Repeatability	[± mm]	0,05
Input speed, maximum	[rpm]	3000
Operation temperature limits	[°C]	-20 – 70
Dynamic load (Fx), maximum	[N]	1000
Dynamic load (Fy), maximum	[N]	900
Dynamic load (Fz), maximum	[N]	900
Dynamic load torque (Mx), maximum	[Nm]	9
Dynamic load torque (My), maximum	[Nm]	48
Dynamic load torque (Mz), maximum	[Nm]	48
Drive shaft force (Frd), maximum	[N]	200
Drive shaft torque (Mta), maximum	[Nm]	12
Screw diameter (d_0)	[mm]	16
Screw lead (p)	[mm]	5, 10, 20
Weight	[kg]	
of unit with zero stroke		3,90
of every 100 mm of stroke		0,56
of carriage		1,20
of option single screw support		0,83
of option double screw supports		1,88

[1] See next page for deviating values of units with other carriage types.

Carriage Idle Torque (M idle) [Nm]

Input speed [rpm]	Screw lead [mm]		
	p = 5	p = 10	p = 20
500 - no screw supports	0,02	0,03	0,04
500 - with screw supports	0,03	0,05	0,07

M idle = the input torque needed to move the carriage with no load on it.

Deflection of the Profile

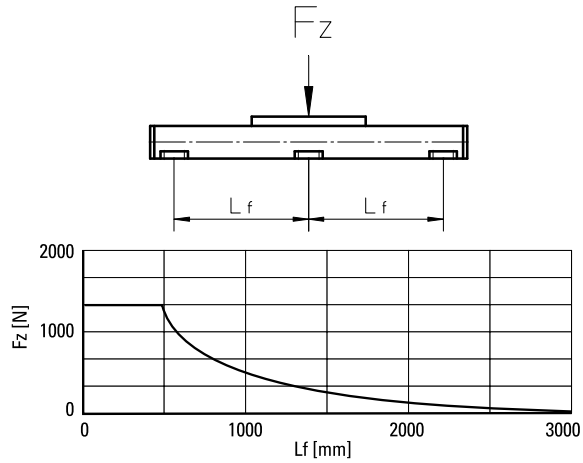

Critical Speed

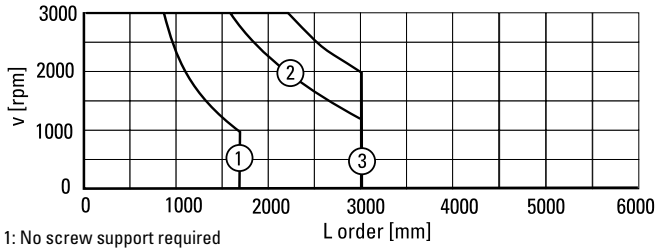

1: No screw support required
2: Single screw support required
3: Double screw supports required

Definition of Forces

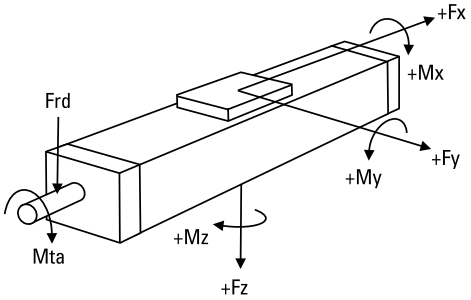

M55

Ball Screw Drive, Ball Guide

Dimensions	Projection
METRIC	

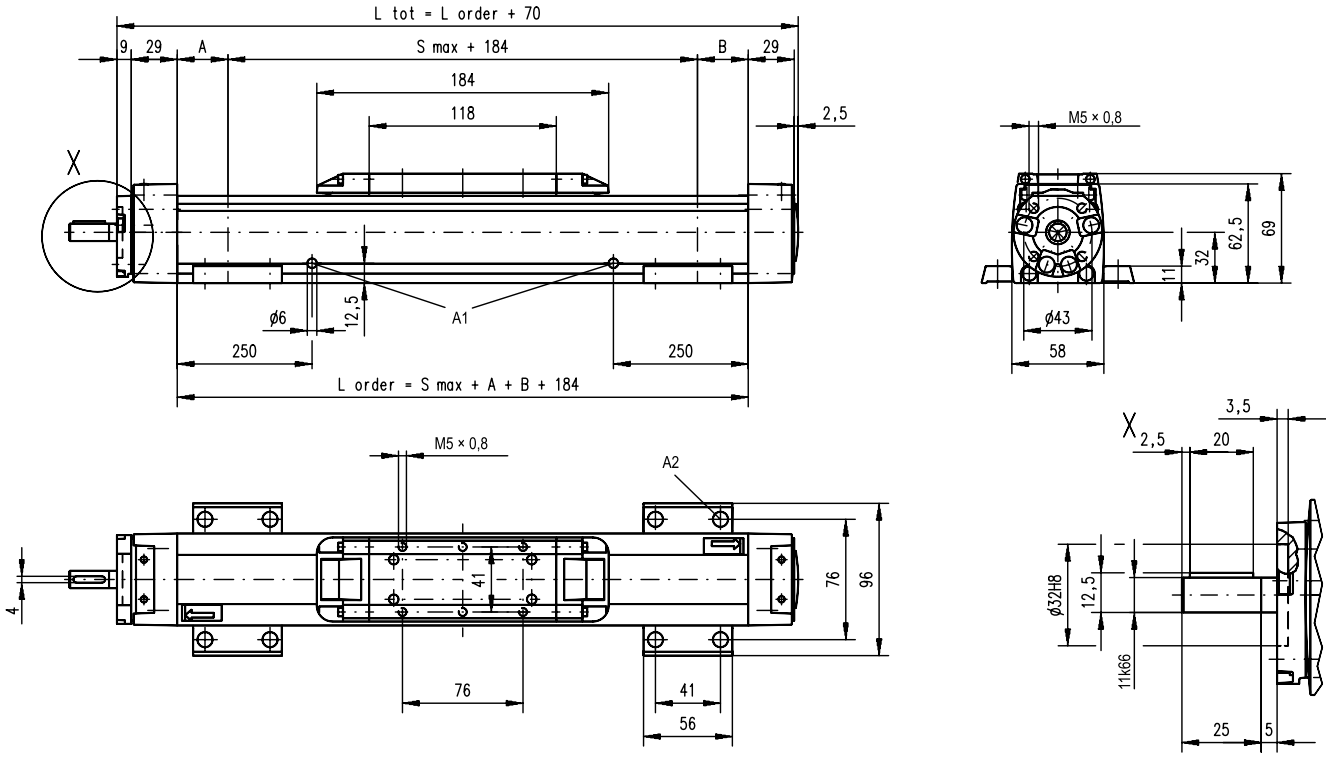

A1: lubrication holes
A2: ø9,5/ø5,5 for socket head cap screw M5

Screw support configuration	A [mm]	B [mm]	Ordering length (L order) [mm]	Total length (L tot) [mm]
No screw support	6	6	L order = Smax + A + B + 184	L tot = L order + 70
Single screw support	40	40	L order = Smax + A + B + 184	L tot = L order + 70
Double screw supports	92	92	L order = Smax + A + B + 184	L tot = L order + 70

Performance Specifications

for Units with Double Standard Carriage (C)

Parameter		M55
Stroke length (Smax), maximum	[mm]	2800
Minimum distance between carriages (Lc)	[mm]	200
Dynamic load (Fy), maximum	[N]	1350
Dynamic load (Fz), maximum	[N]	1350
Dynamic load torque (My), maximum	[Nm]	Lc[1] × 0,675
Dynamic load torque (Mz), maximum	[Nm]	Lc[1] × 0,675
Force required to move second carriage	[N]	2
Weight of unit with zero stroke of carriages	[kg]	 6,5 2,4

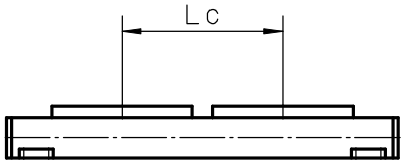

Screw support configuration	A [mm]	B [mm]	Ordering length (L order) [mm]	Total length (L tot) [mm]
No screw support	6	6	L order = Smax + A + B + Lc + 184	L tot = L order + 70
Single screw support	40	40	L order = Smax + A + B + Lc + 184	L tot = L order + 70
Double screw supports	92	92	L order = Smax + A + B + Lc + 184	L tot = L order + 70

[1] Value in mm

M75

Ball Screw Drive, Ball Guide

» Ordering key - see page 190
» Accessories - see page 131
» Additional data - see page 178

General Specifications

Parameter	M75
Profile size (w × h) [mm]	86 × 75
Type of screw	ball screw with single nut
Carriage sealing system	self-adjusting steel cover band
Screw supports	number of screw supports to be specified by customer at order
Lubrication	lubrication of ball screw
Included accessories	none

Performance Specifications

for Units with Single Standard Carriage (A)[1]

Parameter		M75
Stroke length (Smax), maximum	[mm]	4000
Linear speed, maximum	[m/s]	1,0
Acceleration, maximum	[m/s²]	8
Repeatability	[± mm]	0,05
Input speed, maximum	[rpm]	3000
Operation temperature limits	[°C]	-20 – 70
Dynamic load (Fx), maximum	[N]	2500
Dynamic load (Fy), maximum	[N]	2000
Dynamic load (Fz), maximum	[N]	2000
Dynamic load torque (Mx), maximum	[Nm]	18
Dynamic load torque (My), maximum	[Nm]	130
Dynamic load torque (Mz), maximum	[Nm]	130
Drive shaft force (Frd), maximum	[N]	600
Drive shaft torque (Mta), maximum	[Nm]	30
Screw diameter (d0)	[mm]	20
Screw lead (p)	[mm]	5, 12,7, 20
Weight	[kg]	
of unit with zero stroke		6,90
of every 100 mm of stroke		1,05
of carriage		2,50
of option single screw support		1,70
of option double screw supports		3,58

[1] See next page for deviating values of units with other carriage types.

Carriage Idle Torque (M idle) [Nm]

Input speed [rpm]	Screw lead [mm]		
	p = 5	p = 12,7	p = 20
500 - no screw supports	0,04	0,1	0,16
500 - with screw supports	0,06	0,12	0,2

M idle = the input torque needed to move the carriage with no load on it.

Deflection of the Profile

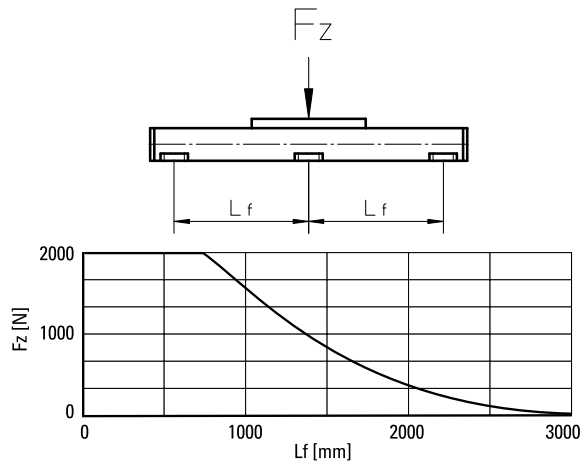

Critical Speed

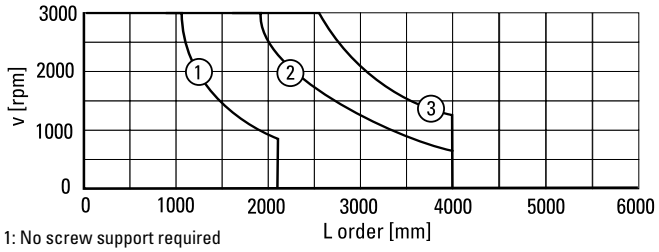

1: No screw support required
2: Single screw support required
3: Double screw supports required

Definition of Forces

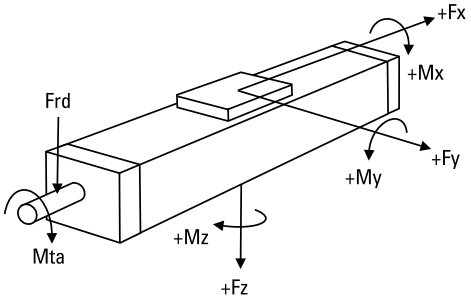

M75

Ball Screw Drive, Ball Guide

Dimensions	Projection
METRIC	

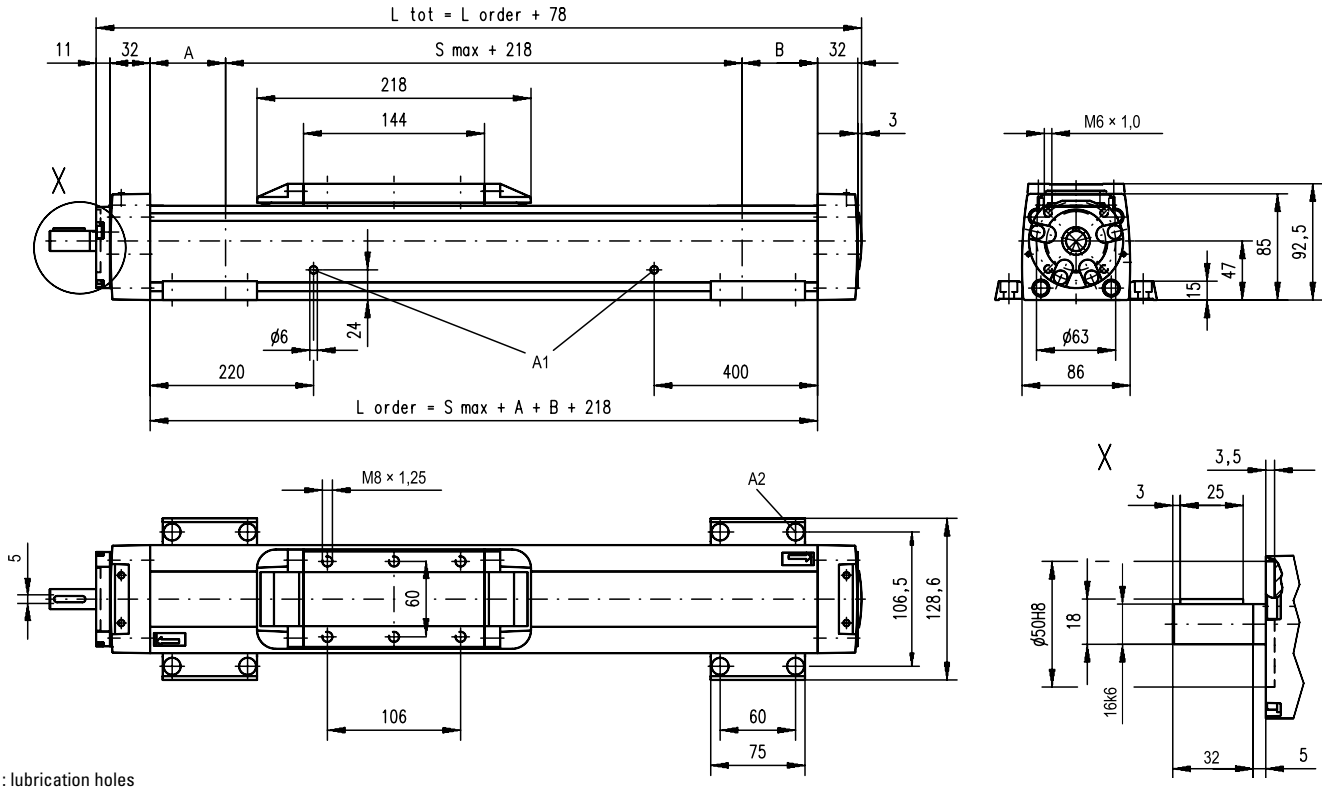

A1: lubrication holes
A2: ø13,5/ø8,5 for socket head cap screw M8

Screw support configuration	A [mm]	B [mm]	Ordering length (L order) [mm]	Total length (L tot) [mm]
No screw support	5	5	L order = Smax + A + B + 218	L tot = L order + 78
Single screw support	60	60	L order = Smax + A + B + 218	L tot = L order + 78
Double screw supports	126	126	L order = Smax + A + B + 218	L tot = L order + 78

Performance Specifications

for Units with Double Standard Carriage (C)

Parameter		M75
Stroke length (Smax), maximum	[mm]	3750
Minimum distance between carriages (Lc)	[mm]	250
Dynamic load (Fy), maximum	[N]	3000
Dynamic load (Fz), maximum	[N]	3000
Dynamic load torque (My), maximum	[Nm]	Lc[1] × 1,5
Dynamic load torque (Mz), maximum	[Nm]	Lc[1] × 1,5
Force required to move second carriage	[N]	2
Weight of unit with zero stroke of carriages	[kg]	 12,2 5,0

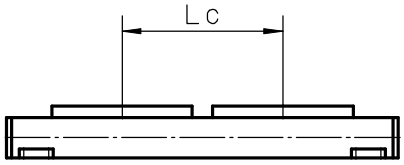

Screw support configuration	A [mm]	B [mm]	Ordering length (L order) [mm]	Total length (L tot) [mm]
No screw support	5	5	L order = Smax + A + B + Lc + 218	L tot = L order + 78
Single screw support	60	60	L order = Smax + A + B + Lc + 218	L tot = L order + 78
Double screw supports	126	126	L order = Smax + A + B + Lc + 218	L tot = L order + 78

[1] Value in mm

M100

Ball Screw Drive, Ball Guide

» Ordering key - see page 190
» Accessories - see page 131
» Additional data - see page 178

General Specifications

Parameter	M100
Profile size (w × h) [mm]	108 × 100
Type of screw	ball screw with single nut
Carriage sealing system	self-adjusting steel cover band
Screw supports	number of screw supports to be specified by customer at order
Lubrication	lubrication of ball screw
Included accessories	none

Performance Specifications

for Units with Single Standard Carriage (A)[1]

Parameter		M100
Stroke length (Smax), maximum	[mm]	6000
Linear speed, maximum	[m/s]	1,25
Acceleration, maximum	[m/s²]	8
Repeatability	[± mm]	0,05
Input speed, maximum	[rpm]	3000
Operation temperature limits	[°C]	-20 – 70
Dynamic load (Fx), maximum	[N]	5000
Dynamic load (Fy), maximum	[N]	5000
Dynamic load (Fz), maximum	[N]	5000
Dynamic load torque (Mx), maximum	[Nm]	60
Dynamic load torque (My), maximum	[Nm]	400
Dynamic load torque (Mz), maximum	[Nm]	400
Drive shaft force (Frd), maximum	[N]	1000
Drive shaft torque (Mta), maximum	[Nm]	45
Screw diameter (d0)	[mm]	25
Screw lead (p)	[mm]	5, 10, 25
Weight	[kg]	
of unit with zero stroke		14,3
of every 100 mm of stroke		1,72
of carriage		4,00
of option single screw support		1,86
of option double screw supports		4,42

[1] See next page for deviating values of units with other carriage types.

Carriage Idle Torque (M idle) [Nm]

Input speed [rpm]	Screw lead [mm]		
	p = 5	p = 10	p = 25
500 - no screw supports	0,08	0,14	0,32
500 - with screw supports	0,1	0,16	0,37

M idle = the input torque needed to move the carriage with no load on it.

Deflection of the Profile

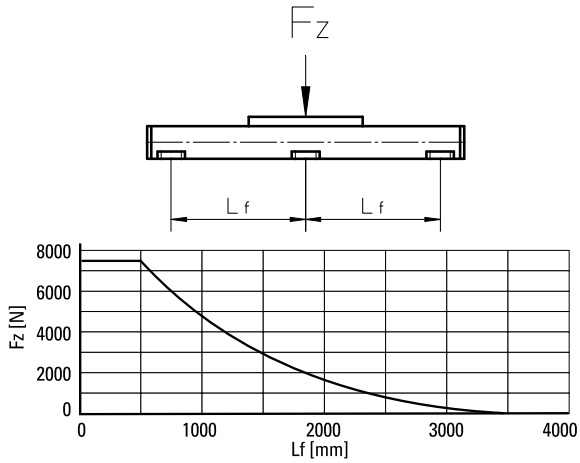

Critical Speed

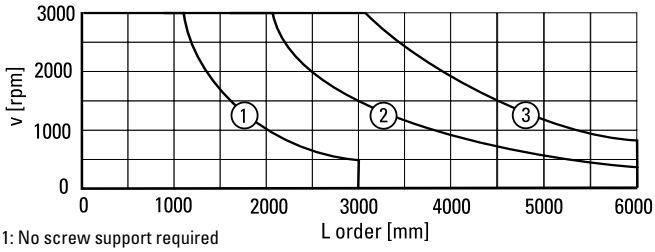

1: No screw support required
2: Single screw support required
3: Double screw supports required

Definition of Forces

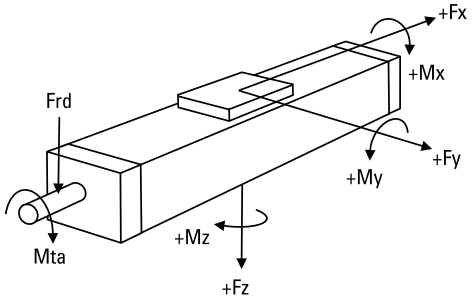

M100

Ball Screw Drive, Ball Guide

Dimensions	Projection
METRIC	

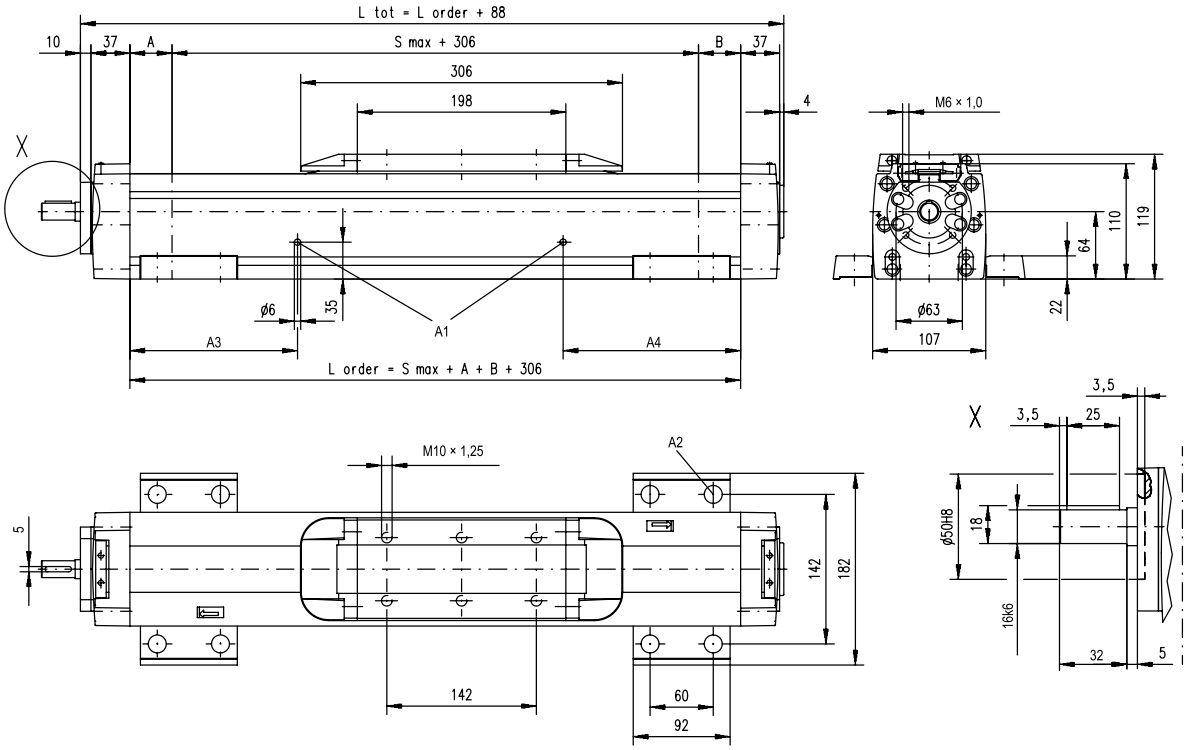

A1: lubrication holes
A2: ø17/ø10,5 for socket head cap screw M10

A3: 100 (L order <= 1 m), 320 (L order > 1 m)
A4: 100 (L order <= 1 m), 430 (L order > 1 m)

Screw support configuration	A [mm]	B [mm]	Ordering length (L order) [mm]	Total length (L tot) [mm]
No screw support	1	1	L order = Smax + A + B + 306	L tot = L order + 88
Single screw support	31	31	L order = Smax + A + B + 306	L tot = L order + 88
Double screw supports	86	86	L order = Smax + A + B + 306	L tot = L order + 88

Performance Specifications

for Units with Double Standard Carriage (C)

Parameter		M100
Stroke length (Smax), maximum	[mm]	5650
Minimum distance between carriages (Lc)	[mm]	350
Dynamic load (Fy), maximum	[N]	7500
Dynamic load (Fz), maximum	[N]	7500
Dynamic load torque (My), maximum	[Nm]	Lc[1] × 3,75
Dynamic load torque (Mz), maximum	[Nm]	Lc[1] × 3,75
Force required to move second carriage	[N]	2
Weight	[kg]	
of unit with zero stroke		25,3
of carriages		8,0

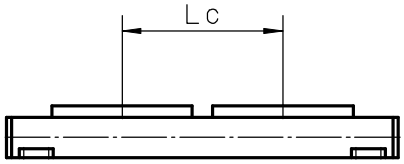

Screw support configuration	A [mm]	B [mm]	Ordering length (L order) [mm]	Total length (L tot) [mm]
No screw support	1	1	L order = Smax + A + B + Lc + 306	L tot = L order + 88
Single screw support	31	31	L order = Smax + A + B + Lc + 306	L tot = L order + 88
Double screw supports	86	86	L order = Smax + A + B + Lc + 306	L tot = L order + 88

[1] Value in mm

2HB10

Ball Screw Drive, Ball Guide

» Ordering key - see page 191
» Accessories - see page 131

General Specifications

Parameter	2HB10
Profile size (w × h) [mm]	100 × 60
Type of screw	ball screw
Carriage sealing system	none (optional shroud or bellows)
Screw supports	none
Lubrication	lubrication of screw and guides
Included accessories	RediMount™ kit

Performance Specifications

Parameter		2HB10
Stroke length (Smax), maximum	[mm]	1375
Linear speed, maximum	[m/s]	0,47
Acceleration, maximum	[m/s²]	9,8
Repeatability	[± mm]	0,005
Input speed, maximum	[rpm]	2800
Operation temperature limits	[°C]	-20 – 80
Dynamic load (Fx), maximum	[N]	2100
Dynamic load (Fy), maximum	[N]	8000
Dynamic load (Fz), maximum	[N]	8000
Dynamic load torque (Mx), maximum	[Nm]	279
Dynamic load torque (My), maximum	[Nm]	216
Dynamic load torque (Mz), maximum	[Nm]	216
Drive shaft force (Frd), maximum	[N]	533
Drive shaft torque (Mta), maximum	[Nm]	1,86
Ball screw diameter (d_0)	[mm]	16
Ball screw lead (p)	[mm]	5, 10
Weight	[kg]	
of unit with zero stroke		2,59
of every 100 mm of stroke		0,69
of each carriage		0,82

Deflection of the Profile

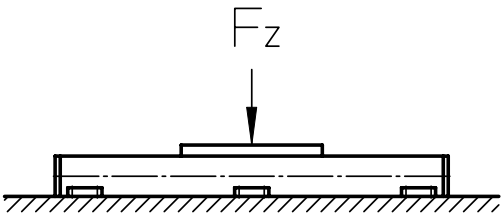

The unit must be continuously supported by a machined surface under its entire length.

Definition of Forces

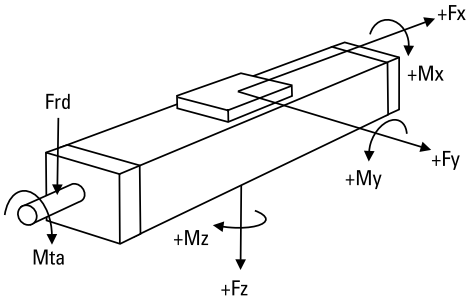

2HB10

Ball Screw Drive, Ball Guide

Dimensions	Projection
METRIC	

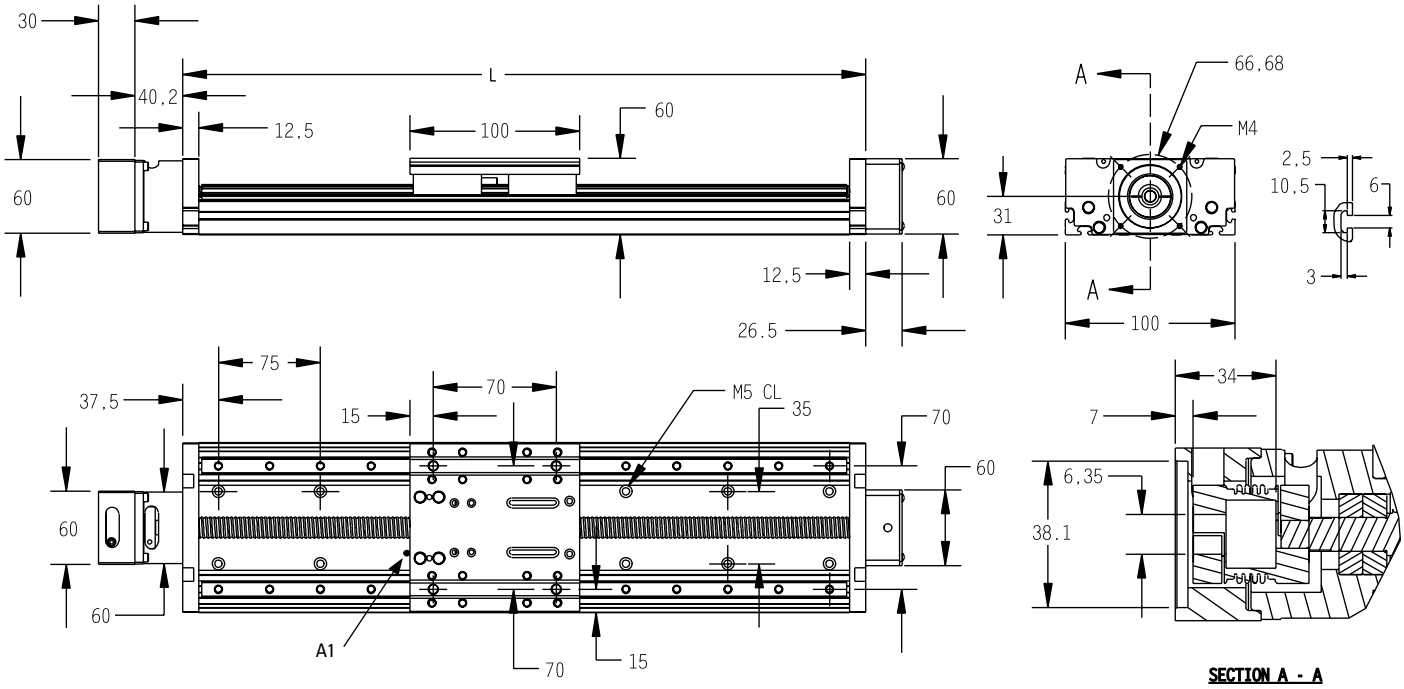

A1: lubrication nipple (using the unit with the nipple mounted makes the stroke 10 mm shorter).

Standard NEMA23 motor dimensions are shown. Other mounting sizes are available and easily configured. Please see www.linearmotioneering.com for details.

Ordering Length (L) and Maximum Stroke (Smax)
L = Smax + 125

2HB20

Ball Screw Drive, Ball Guide

» Ordering key - see page 191
» Accessories - see page 131

General Specifications

Parameter	2HB20
Profile size (w × h) [mm]	200 × 90
Type of screw	ball screw
Carriage sealing system	none (optional shroud or bellows)
Screw supports	none
Lubrication	lubrication of screw and guides
Included accessories	RediMount™ kit

Performance Specifications

Parameter		2HB20
Stroke length (Smax), maximum	[mm]	2760
Linear speed, maximum	[m/s]	0,75
Acceleration, maximum	[m/s²]	9,8
Repeatability	[± mm]	0,005
Input speed, maximum	[rpm]	1800
Operation temperature limits	[°C]	-20 – 80
Dynamic load (Fx), maximum	[N]	4697
Dynamic load (Fy), maximum	[N]	34000
Dynamic load (Fz), maximum	[N]	34000
Dynamic load torque (Mx), maximum	[Nm]	2463
Dynamic load torque (My), maximum	[Nm]	1903
Dynamic load torque (Mz), maximum	[Nm]	1903
Drive shaft force (Frd), maximum	[N]	533
Drive shaft torque (Mta), maximum	[Nm]	15,5
Ball screw diameter (d_0)	[mm]	25
Ball screw lead (p)	[mm]	5, 10, 25
Weight	[kg]	
of unit with zero stroke		13,32
of every 100 mm of stroke		1,70
of each carriage		4,47

[1] Value for the complete unit
[2] Value for the ball guide only

Deflection of the Profile

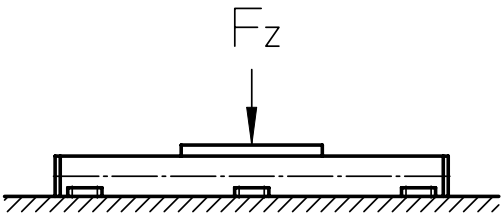

The unit must be continuously supported by a machined surface under its entire length.

Definition of Forces

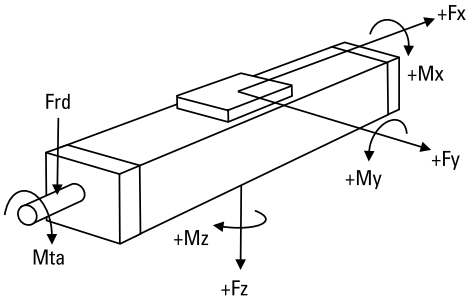

2HB20

Ball Screw Drive, Ball Guide

Dimensions	Projection
METRIC	

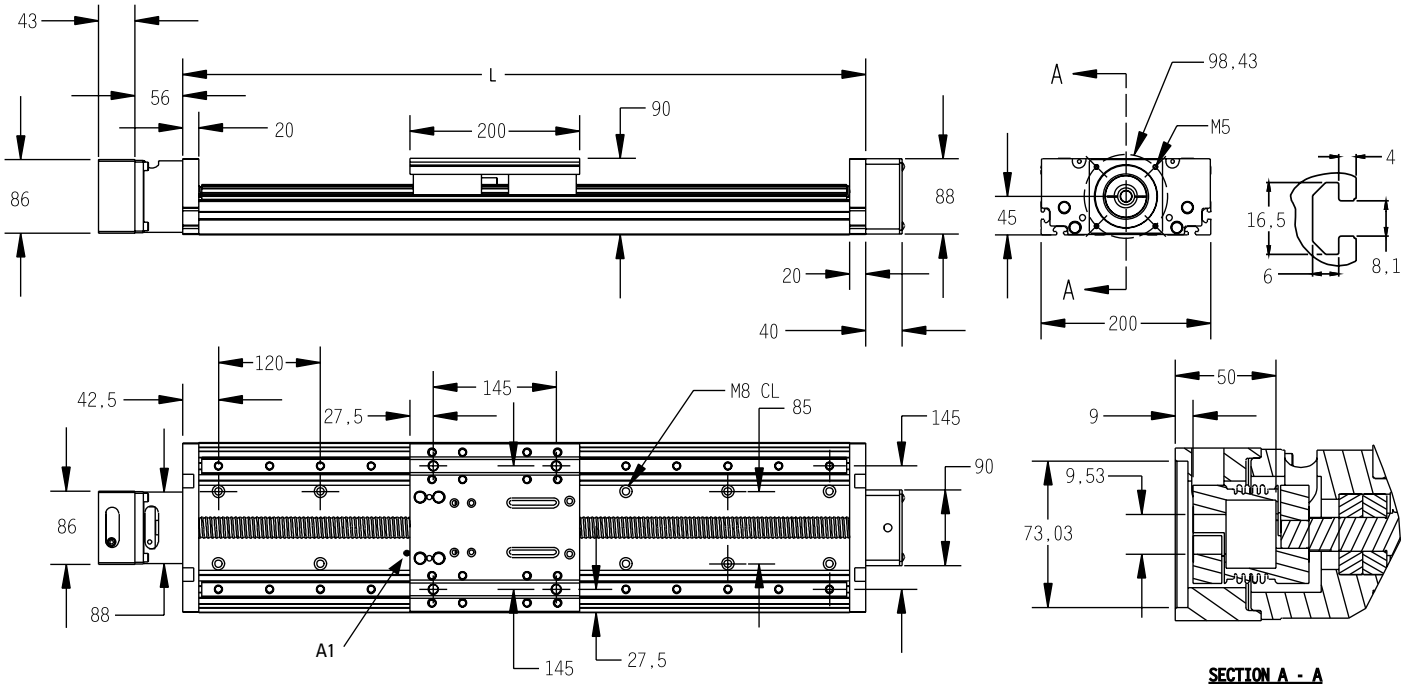

A1: lubrication nipple (using the unit with the nipple mounted makes the stroke 10 mm shorter).

Standard NEMA23 motor dimensions are shown. Other mounting sizes are available and easily configured. Please see www.linearmotioneering.com for details.

Ordering Length (L) and Maximum Stroke (Smax)
L = Smax + 240

2RB12

Ball Screw Drive, Ball Guide

» Ordering key - see page 192
» Accessories - see page 131

General Specifications

Parameter	2RB12
Profile size (w × h) [mm] [1]	130 × 40
Type of screw	ball screw
Carriage sealing system	none (optional bellows)
Screw supports	none
Lubrication	lubrication of screws and guides
Included accessories	RediMount™ kit

[1] Base width × carriage height.

Performance Specifications

Parameter		2RB12
Stroke length (Smax), maximum	[mm]	1951
Linear speed, maximum	[m/s]	0,47
Acceleration, maximum	[m/s²]	9,8
Repeatability	[± mm]	0,005
Accuracy	[± mm]	0,025 / 300 mm
Input speed, maximum	[rpm]	2800
Operation temperature limits	[°C]	-20 – 80
Dynamic load (Fx), maximum	[N]	2100
Dynamic load (Fy), maximum	[N]	880
Dynamic load (Fz), maximum	[N]	1760
Dynamic load torque (Mx), maximum	[Nm]	65,5
Dynamic load torque (My), maximum	[Nm]	76,8
Dynamic load torque (Mz), maximum	[Nm]	38,4
Drive shaft force (Frd), maximum	[N]	533
Drive shaft torque (Mta), maximum	[Nm]	1,86
Ball screw diameter (d_0)	[mm]	16
Ball screw lead (p)	[mm]	5, 10
Weight	[kg]	
of unit with zero stroke		3,88
of every 100 mm of stroke		0,93
of each carriage		1,32

Deflection of the Profile

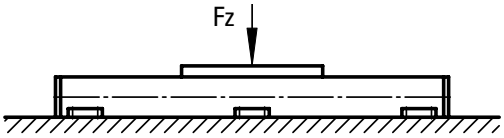

The unit must be continuously supported by a machined surface under its entire length.

Definition of Forces

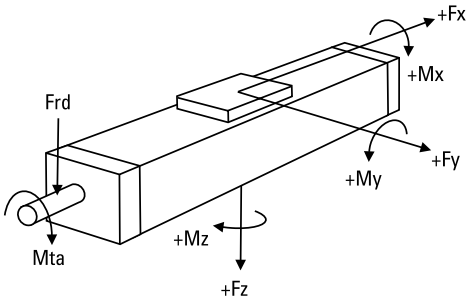

2RB12

Ball Screw Drive, Ball Guide

Dimensions	Projection
METRIC	

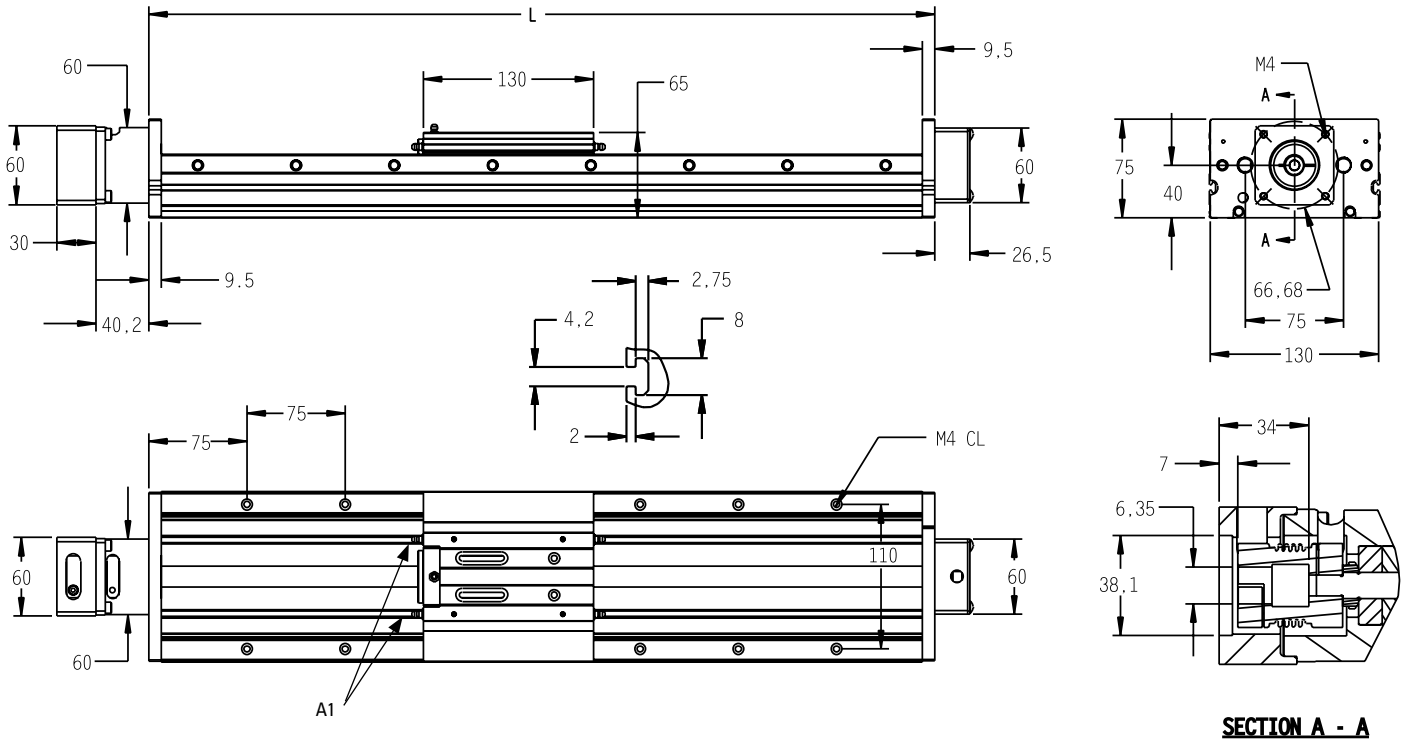

A1: lubrication nipples (using the unit with the nipples mounted makes the stroke 10 mm shorter).

Standard NEMA23 motor dimensions are shown. Other mounting sizes are available and easily configured. Please see www.linearmotioneering.com for details.

Ordering Length (L) and Maximum Stroke (Smax)
L = Smax + 149

2RB16

Ball Screw Drive, Ball Guide

» Ordering key - see page 192
» Accessories - see page 131

General Specifications

Parameter	2RB16
Profile size (w × h) [mm] [1]	160 × 48
Type of screw	ball screw
Carriage sealing system	none (optional bellows)
Screw supports	none
Lubrication	lubrication of screws and guides
Included accessories	RediMount™ kit

[1] Base width × carriage height.

Performance Specifications

Parameter		2RB16
Stroke length (Smax), maximum	[mm]	2815
Linear speed, maximum	[m/s]	0,73
Acceleration, maximum	[m/s²]	9,8
Repeatability	[± mm]	0,005
Accuracy	[± mm]	0,025 / 300 mm
Input speed, maximum	[rpm]	2200
Operation temperature limits	[°C]	-20 – 80
Dynamic load (Fx), maximum	[N]	2998
Dynamic load (Fy), maximum	[N]	2588
Dynamic load (Fz), maximum	[N]	5176
Dynamic load torque (Mx), maximum	[Nm]	243
Dynamic load torque (My), maximum	[Nm]	299
Dynamic load torque (Mz), maximum	[Nm]	150
Drive shaft force (Frd), maximum	[N]	533
Drive shaft torque (Mta), maximum	[Nm]	2,66
Ball screw diameter (d_0)	[mm]	20
Ball screw lead (p)	[mm]	5, 10, 20
Weight	[kg]	
of unit with zero stroke		6,17
of every 100 mm of stroke		1,44
of each carriage		2,25

Deflection of the Profile

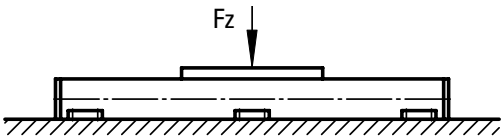

The unit must be continuously supported by a machined surface under its entire length.

Definition of Forces

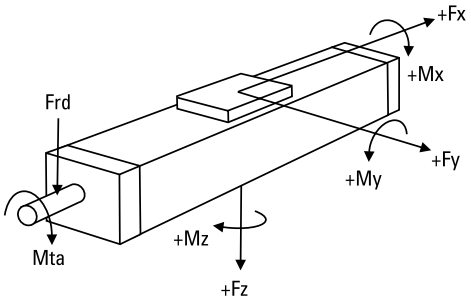

2RB16

Ball Screw Drive, Ball Guide

Dimensions	Projection
METRIC	

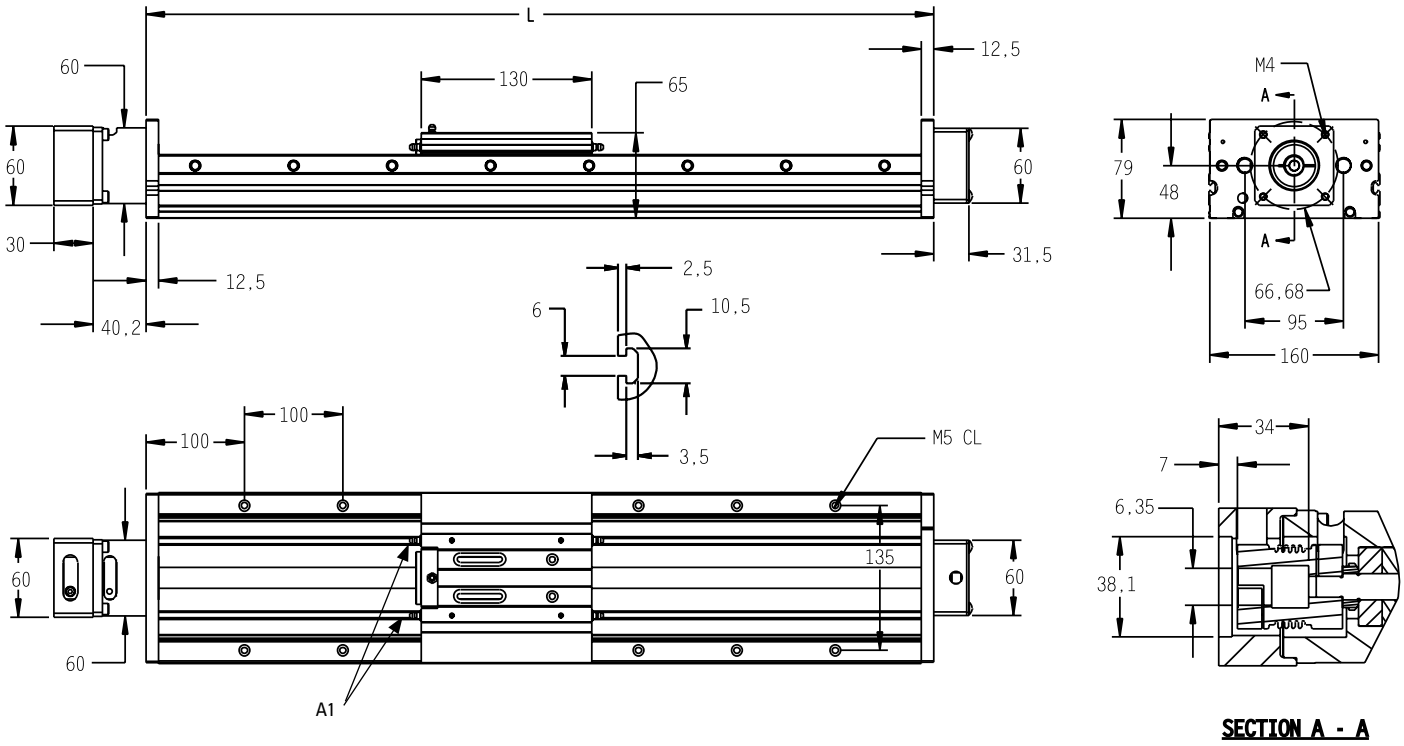

A1: lubrication nipples (using the unit with the nipples mounted makes the stroke 10 mm shorter).

Standard NEMA23 motor dimensions are shown. Other mounting sizes are available and easily configured. Please see www.linearmotioneering.com for details.

Ordering Length (L) and Maximum Stroke (Smax)
L = Smax + 185

MS25

Lead Screw Drive, Ball Guide

» Ordering key - see page 193
» Accessories - see page 131

General Specifications

Parameter	MS25
Profile size (w × h) [mm] [1]	50 × 25
Type of screw	lead screw
Carriage sealing system	none (optional bellows)
Screw supports	none
Lubrication	lubrication of screws and guides
Included accessories	RediMount™ kit

[1] Base width × carriage height.

Performance Specifications

Parameter		MS25
Stroke length (Smax), maximum	[mm]	705,5
Linear speed, maximum	[m/s]	0,85
Acceleration, maximum	[m/s²]	9,8
Repeatability	[± mm]	0,005
Accuracy	[± mm]	0,18 / 300 mm
Input speed, maximum	[rpm]	2000
Operation temperature limits	[°C]	-20 – 80
Dynamic load (Fx), maximum	[N]	17,8
Dynamic load (Fy), maximum	[N]	100
Dynamic load (Fz), maximum	[N]	100
Dynamic load torque (Mx), maximum	[Nm]	1,4
Dynamic load torque (My), maximum	[Nm]	1,3
Dynamic load torque (Mz), maximum	[Nm]	2,7
Drive shaft force (Frd), maximum	[N]	222
Drive shaft torque (Mta), maximum	[Nm]	0,08
Lead screw diameter (d0)	[mm]	6,35
Lead screw lead (p)		
inch leads	[inch]	0,025, 0,05, 0,062, 0,2, 0,25, 0,5, 1,0
metric leads	[mm]	1,5, 2, 3
Weight	[kg]	
of unit with zero stroke		0,47
of every 100 mm of stroke		0,18
of each carriage		0,065

Deflection of the Profile

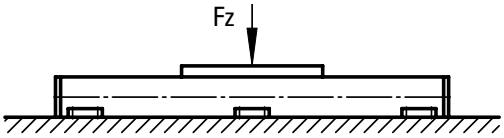

The unit must be continuously supported by a machined surface under its entire length.

Definition of Forces

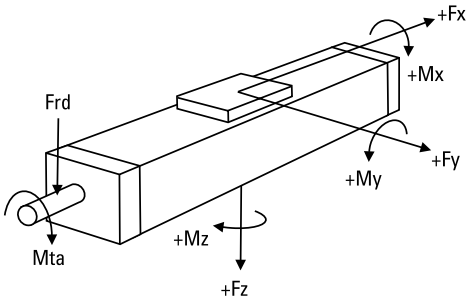

MS25

Lead Screw Drive, Ball Guide

Dimensions	Projection
METRIC	

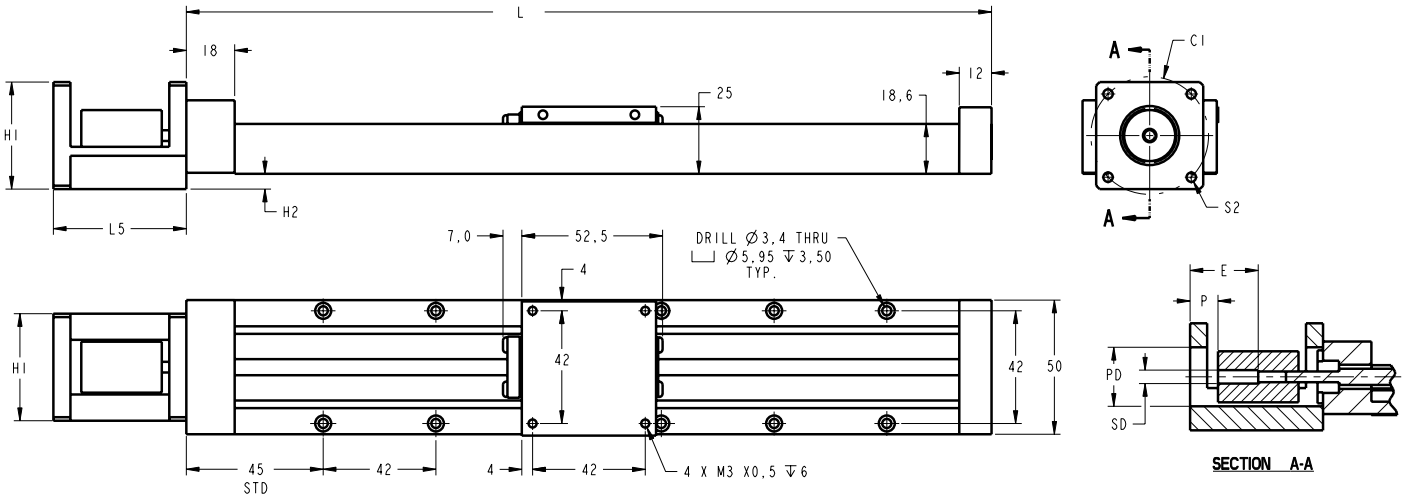

Ordering Length (L) and Maximum Stroke (Smax)
L = Smax + 95

Motor block frame size[1]	H1	H2	SD	PD	P	E (max.)	S2	L5	C1
NEMA-17	39,9	5,7	5,0	22,0	10,4	28,0	ø 0,136	49,5	43,8
NEMA-23	57,2	14,3	6,35	38,2	14,5	33,0	M4	55,9	66,7

[1] Other sizes are easily configured. See www.linearmotioneering.com for the motor mounting configurator.

MS33

Lead Screw Drive, Ball Guide

» Ordering key - see page 193
» Accessories - see page 131

General Specifications

Parameter	MS33
Profile size (w × h) [mm] [1]	60 × 33
Type of screw	lead screw
Carriage sealing system	none (optional bellows)
Screw supports	none
Lubrication	lubrication of screws and guides
Included accessories	RediMount™ kit

[1] Base width × carriage height.

Performance Specifications

Parameter		MS33
Stroke length (Smax), maximum	[mm]	704
Linear speed, maximum	[m/s]	1,02
Acceleration, maximum	[m/s²]	9,8
Repeatability	[± mm]	0,005
Accuracy	[± mm]	0,18 / 300 mm
Input speed, maximum	[rpm]	2000
Operation temperature limits	[°C]	-20 – 80
Dynamic load (Fx), maximum	[N]	80,1
Dynamic load (Fy), maximum	[N]	150
Dynamic load (Fz), maximum	[N]	150
Dynamic load torque (Mx), maximum	[Nm]	2,8
Dynamic load torque (My), maximum	[Nm]	2,5
Dynamic load torque (Mz), maximum	[Nm]	5,1
Drive shaft force (Frd), maximum	[N]	222
Drive shaft torque (Mta), maximum	[Nm]	0,43
Lead screw diameter (d0)	[mm]	9,525
Lead screw lead (p)		
inch leads	[inch]	0,0625, 0,1, 0,125, 0,2, 0,25, 0,375, 0,5, 1,0, 1,2
metric leads	[mm]	2
Weight	[kg]	
of unit with zero stroke		0,69
of every 100 mm of stroke		0,31
of each carriage		0,12

Deflection of the Profile

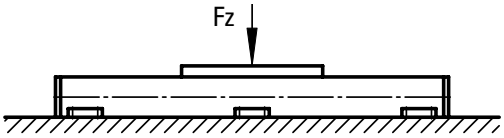

The unit must be continuously supported by a machined surface under its entire length.

Definition of Forces

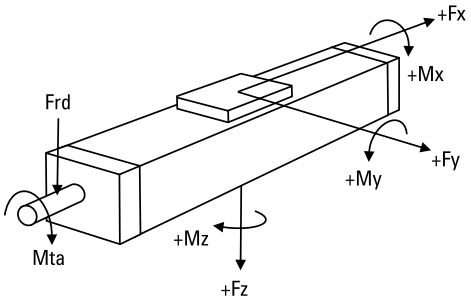

MS33

Lead Screw Drive, Ball Guide

Dimensions	Projection
METRIC	

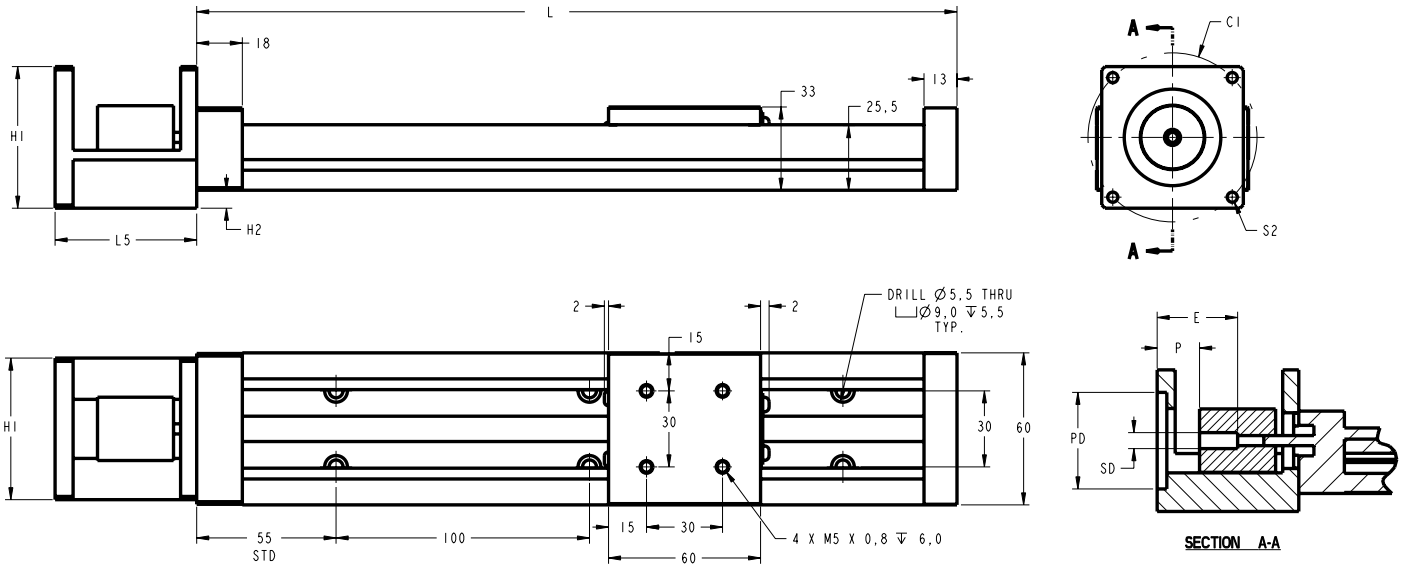

Ordering Length (L) and Maximum Stroke (Smax)
L = Smax + 96

Motor block frame size[1]	H1	H2	SD	PD	P	E (max.)	S2	L5	C1
NEMA-17	39,9	1,2 [2]	5,0	22,0	7,8	28,0	ø 0,136	49,5	43,8
NEMA-23	57,2	7,5	6,35	38,2	14,0	33,0	M4	55,9	66,7

[1] Other sizes are easily configured. See www.linearmotioneering.com for the motor mounting configurator.
[2] Above base.

2DB08

Lead Screw Drive, Ball Guide – Inch Interface

» Ordering key - see page 194
» Accessories - see page 131

General Specifications

Parameter	2DB08
Profile size (w × h) [inch]	4.50 × 1.625
Type of screw	lead screw
Carriage sealing system	none (optional bellows)
Screw supports	none
Lubrication	lubrication of screws and guides
Included accessories	RediMount™ kit

Performance Specifications

Parameter		2DB08
Stroke length (Smax), maximum	[inch]	41
Linear speed, maximum	[inch/sec]	33.3
Acceleration, maximum	[inch/s²]	385
Repeatability	[± inch]	0.0002
Accuracy	[± inch]	0.007 / 11.81 in
Input speed, maximum	[rpm]	2000
Operation temperature limits	[°F]	-4 – 176
Dynamic load (Fx), maximum	[lbs]	20
Dynamic load (Fy), maximum	[lbs]	168
Dynamic load (Fz), maximum	[lbs]	336
Dynamic load torque (Mx), maximum	[lbf-in]	500
Dynamic load torque (My), maximum	[lbf-in]	500
Dynamic load torque (Mz), maximum	[lbf-in]	250
Drive shaft force (Frd), maximum [1]	[lbf]	50
Drive shaft torque (Mta), maximum	[lbf-in]	3.54
Lead screw diameter (d0)	[inch]	0.375
Lead screw lead (p)	[inch]	0.1, 0.25, 0.5, 0.75, 1
Weight	[lb]	
of unit with zero stroke		5.93
of every 100 mm of stroke		1.16
of each carriage		1.89

[1] With radial mount option only.

Deflection of the Profile

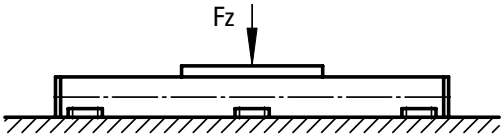

The unit must be continuously supported by a machined surface under its entire length.

Definition of Forces

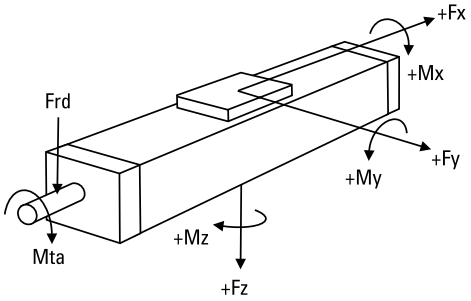

2DB08

Lead Screw Drive, Ball Guide – Inch Interface

Dimensions	Projection
INCH	

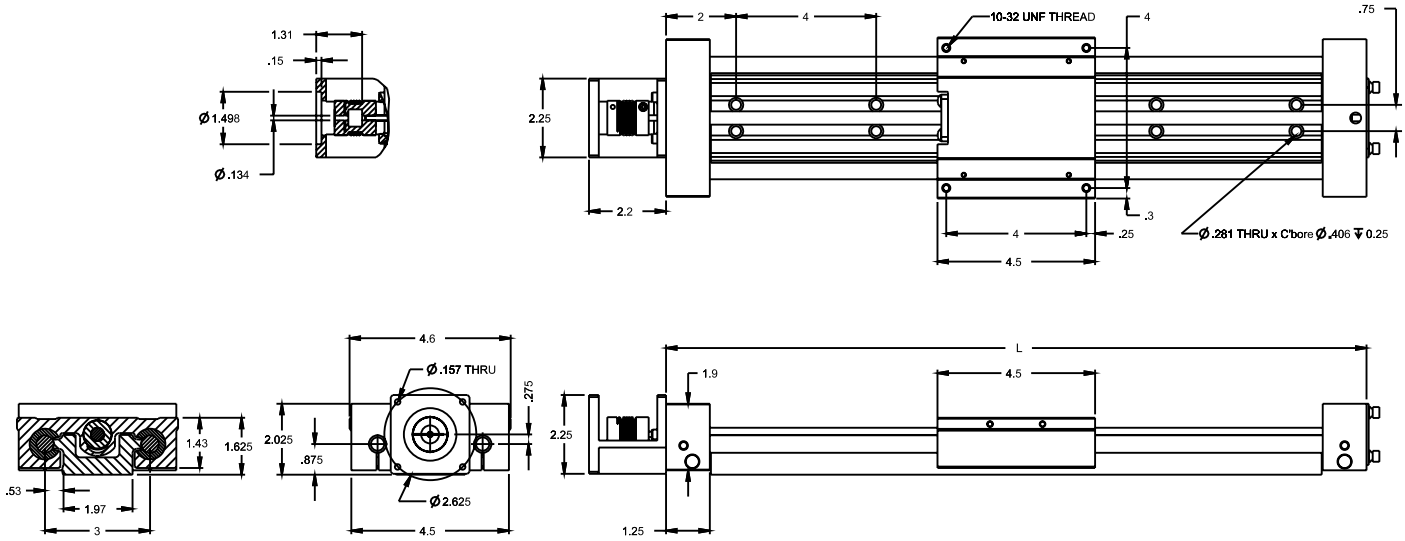

Standard NEMA23 motor dimensions are shown. Other mounting sizes are available and easily configured. Please see www.linearmotioneering.com for details.

Ordering Length (L) and Maximum Stroke (Smax)
L = Smax + 7.0

2DB120

Ball Screw Drive, Ball Guide – Inch Interface

» Ordering key - see page 194
» Accessories - see page 131

General Specifications

Parameter	2DB120
Profile size (w × h) [inch]	6 × 2.125
Type of screw	ball screw
Carriage sealing system	none (optional bellows)
Screw supports	none
Lubrication	lubrication of screws and guides
Included accessories	RediMount™ kit

Performance Specifications

Parameter		2DB120
Stroke length (Smax), maximum	[inch]	63
Linear speed, maximum	[inch/sec]	10.0
Acceleration, maximum	[inch/s²]	385
Repeatability standard nut preloaded nut	[± inch]	 0.0020 0.0002
Accuracy	[± inch]	0.002 / 12 in
Input speed, maximum	[rpm]	3000
Operation temperature limits	[°F]	-4 – 176
Dynamic load (Fx), maximum	[lbs]	190
Dynamic load (Fy), maximum	[lbs]	1058
Dynamic load (Fz), maximum	[lbs]	2115
Dynamic load torque (Mx), maximum	[lbf-in]	4150
Dynamic load torque (My), maximum	[lbf-in]	4150
Dynamic load torque (Mz), maximum	[lbf-in]	2071
Drive shaft force (Frd), maximum [1]	[lbf]	120
Drive shaft torque (Mta), maximum	[lbf-in]	6.73
Ball screw diameter (d_0)	[inch]	0.5
Ball screw lead (p)	[inch]	0.631
Weight of unit with zero stroke of every 100 mm of stroke of each carriage	[lb]	 13.17 2.30 4.29

[1] With radial mount option only.

Deflection of the Profile

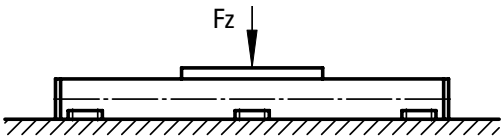

The unit must be continuously supported by a machined surface under its entire length.

Definition of Forces

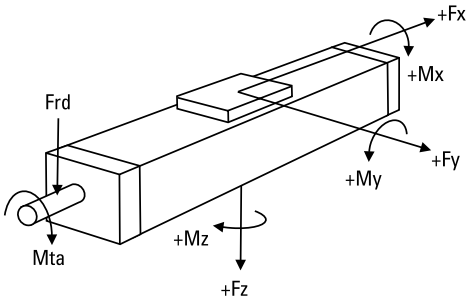

2DB120

Ball Screw Drive, Ball Guide – Inch Interface

Dimensions	Projection
INCH	

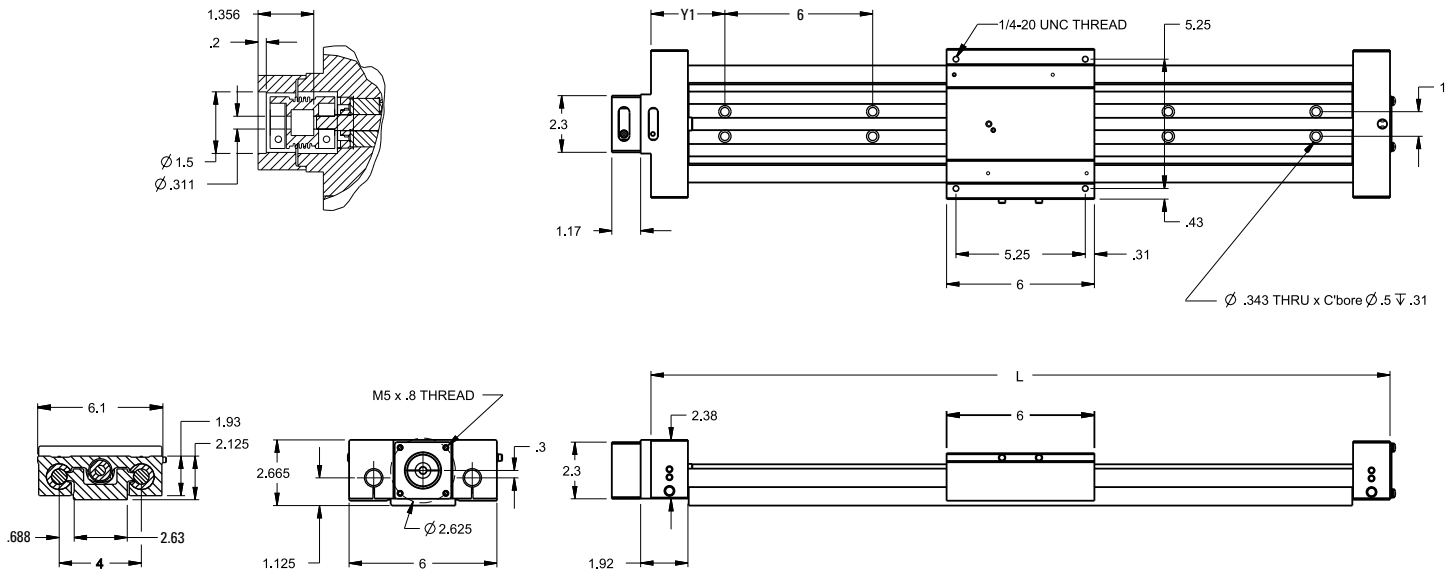

Standard NEMA23 motor dimensions are shown. Other mounting sizes are available and easily configured. Please see www.linearmotioneering.com for details.

Ordering Length (L) and Maximum Stroke (Smax)
L = Smax + 9.0

2DB12J

Ball Screw Drive, Ball Guide – Inch Interface

» Ordering key - see page 194
» Accessories - see page 131

General Specifications

Parameter	2DB12J
Profile size (w × h) [inch]	6 × 2.562
Type of screw	ball screw
Carriage sealing system	none (optional bellows)
Screw supports	none
Lubrication	lubrication of screws and guides
Included accessories	RediMount™ kit

Performance Specifications

Parameter		2DB12J
Stroke length (Smax), maximum	[inch]	63
Linear speed, maximum	[inch/sec]	25.0
Acceleration, maximum	[inch/s²]	385
Repeatability	[± inch]	0.0002
Accuracy	[± inch]	0.002 / 12 in
Input speed, maximum	[rpm]	3000
Operation temperature limits	[°F]	-4 – 176
Dynamic load (Fx), maximum	[lbs]	375
Dynamic load (Fy), maximum	[lbs]	1058
Dynamic load (Fz), maximum	[lbs]	2115
Dynamic load torque (Mx), maximum	[lbf-in]	4150
Dynamic load torque (My), maximum	[lbf-in]	4150
Dynamic load torque (Mz), maximum	[lbf-in]	2071
Drive shaft force (Frd), maximum [1]	[lbf]	120
Drive shaft torque (Mta), maximum	[lbf-in]	33.19
Ball screw diameter (d_0)	[inch]	0.50
Ball screw lead (p)	[inch]	0.5
Weight	[lb]	
of unit with zero stroke		13.58
of every 100 mm of stroke		2.296
of each carriage		4.850

[1] With radial mount option only.

Deflection of the Profile

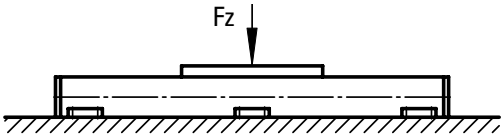

The unit must be continuously supported by a machined surface under its entire length.

Definition of Forces

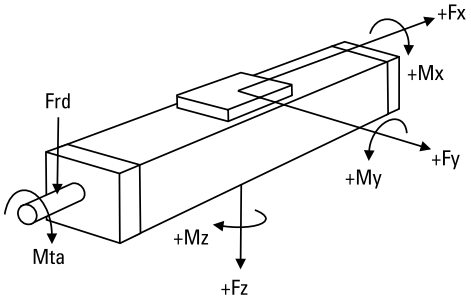

2DB12J

Ball Screw Drive, Ball Guide – Inch Interface

Dimensions	Projection
INCH	

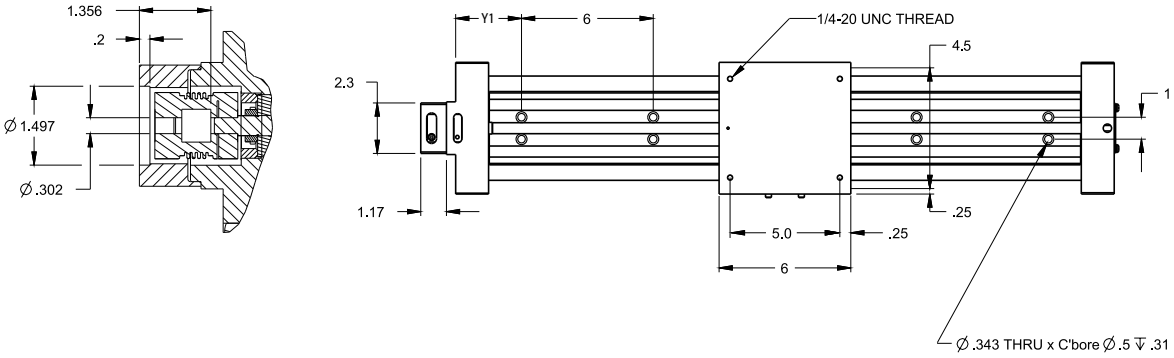

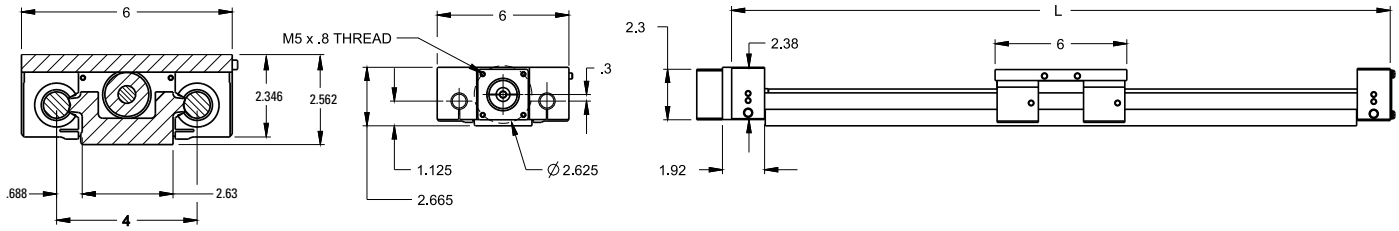

Standard NEMA23 motor dimensions are shown. Other mounting sizes are available and easily configured. Please see www.linearmotioneering.com for details.

Ordering Length (L) and Maximum Stroke (Smax)
L = Smax + 9.0

2DB160

Ball Screw Drive, Ball Guide – Inch Interface

» Ordering key - see page 194
» Accessories - see page 131

General Specifications

Parameter	2DB160
Profile size (w × h) [inch]	7.5 × 2.625
Type of screw	ball screw
Carriage sealing system	none (optional bellows)
Screw supports	none
Lubrication	lubrication of screws and guides
Included accessories	RediMount™ kit

Performance Specifications

Parameter		2DB160
Stroke length (Smax), maximum	[inch]	84.5
Linear speed, maximum	[inch/sec]	8.3
Acceleration, maximum	[inch/s²]	385
Repeatability standard nut preloaded nut	[± inch]	 0.0020 0.0002
Accuracy	[± inch	0.002 / 12 in
Input speed, maximum	[rpm]	2500
Operation temperature limits	[°F]	-4 – 176
Dynamic load (Fx), maximum	[lbs]	350
Dynamic load (Fy), maximum	[lbs]	1777
Dynamic load (Fz), maximum	[lbs]	3555
Dynamic load torque (Mx), maximum	[lbf-in]	8850
Dynamic load torque (My), maximum	[lbf-in]	8450
Dynamic load torque (Mz), maximum	[lbf-in]	4195
Drive shaft force (Frd), maximum [1]	[lbf]	120
Drive shaft torque (Mta), maximum	[lbf-in]	12.39
Ball screw diameter (d_0) inch diameters metric diameters	 [inch] [mm]	 0.75 20
Ball screw lead (p) inch leads metric leads	 [inch] [mm]	 0.2 5,0
Weight of unit with zero stroke of every 100 mm of stroke of each carriage	[lb]	 26.74 3.86 8.61

[1] With radial mount option only.

Deflection of the Profile

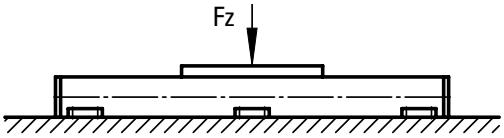

The unit must be continuously supported by a machined surface under its entire length.

Definition of Forces

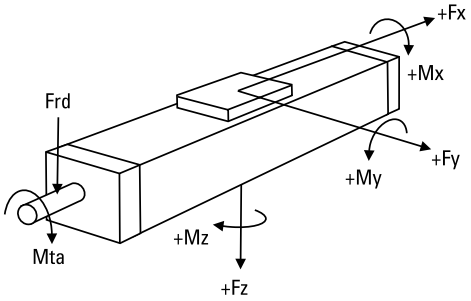

2DB160

Ball Screw Drive, Ball Guide – Inch Interface

Dimensions	Projection
INCH	

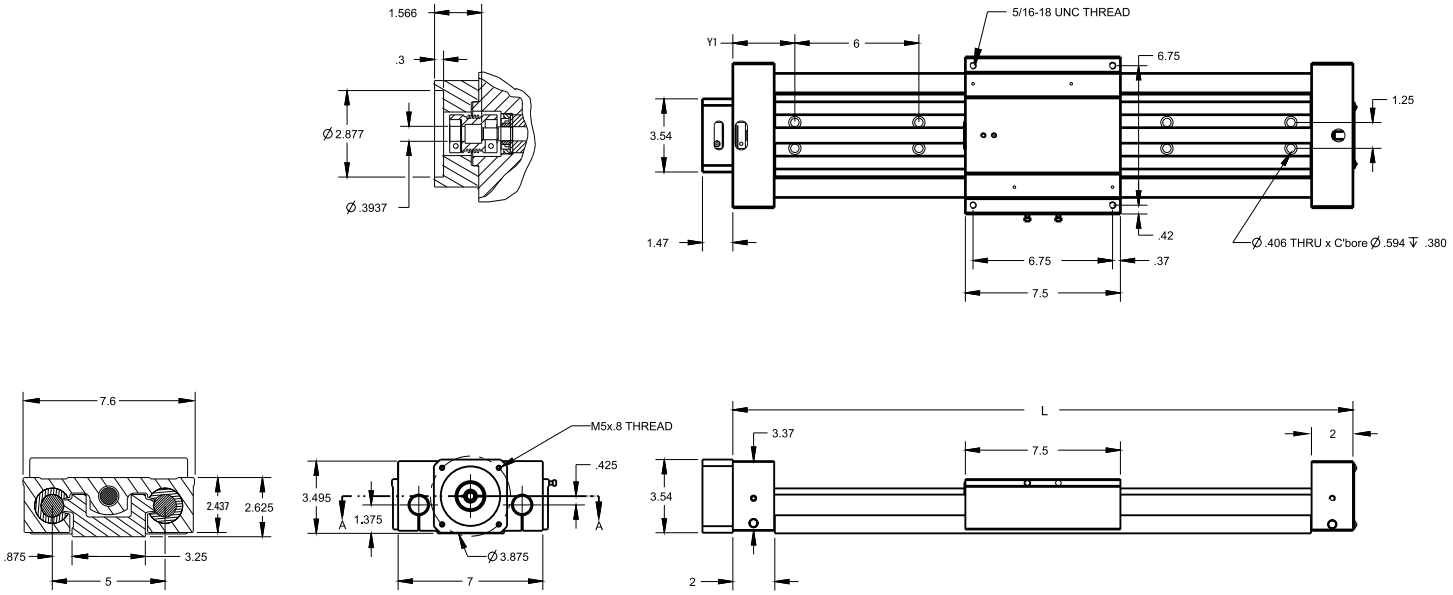

Standard NEMA23 motor dimensions are shown. Other mounting sizes are available and easily configured. Please see www.linearmotioneering.com for details.

Ordering Length (L) and Maximum Stroke (Smax)
L = Smax + 11.5

2DB16J

Ball Screw Drive, Ball Guide – Inch Interface

» Ordering key - see page 194
» Accessories - see page 131

General Specifications

Parameter	2DB16J
Profile size (w × h) [inch]	7.5 × 3.062
Type of screw	ball screw
Carriage sealing system	none (optional bellows)
Screw supports	none
Lubrication	lubrication of screws and guides
Included accessories	RediMount™ kit

Performance Specifications

Parameter		2DB16J
Stroke length (Smax), maximum	[inch]	84.5
Linear speed, maximum	[inch/sec]	41.67
Acceleration, maximum	[inch/s²]	385
Repeatability	[± inch]	0.0002
Accuracy	[± inch]	0.002 / 12 in
Input speed, maximum	[rpm]	2500
Operation temperature limits	[°F]	-4 – 176
Dynamic load (Fx), maximum	[lbs]	350
Dynamic load (Fy), maximum	[lbs]	1777
Dynamic load (Fz), maximum	[lbs]	3555
Dynamic load torque (Mx), maximum	[lbf-in]	8877
Dynamic load torque (My), maximum	[lbf-in]	8098
Dynamic load torque (Mz), maximum	[lbf-in]	4053
Drive shaft force (Frd), maximum [1]	[lbf]	120
Drive shaft torque (Mta), maximum	[lbf-in]	30.98
Ball screw diameter (d_0)	[inch]	0.631, 0.750
Ball screw lead (p)	[inch]	0.5, 1.0
Weight	[lb]	
of unit with zero stroke		25.73
of every 100 mm of stroke		3.86
of each carriage		7.70

[1] With radial mount option only.

Deflection of the Profile

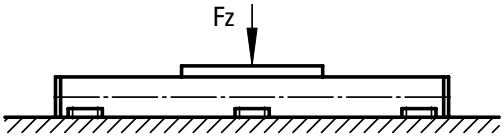

The unit must be continuously supported by a machined surface under its entire length.

Definition of Forces

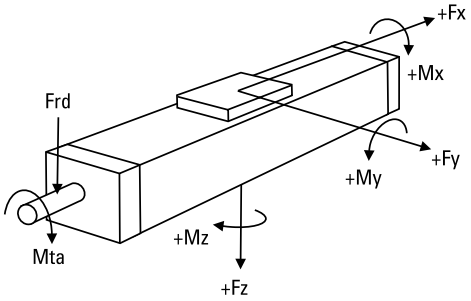

2DB16J

Ball Screw Drive, Ball Guide – Inch Interface

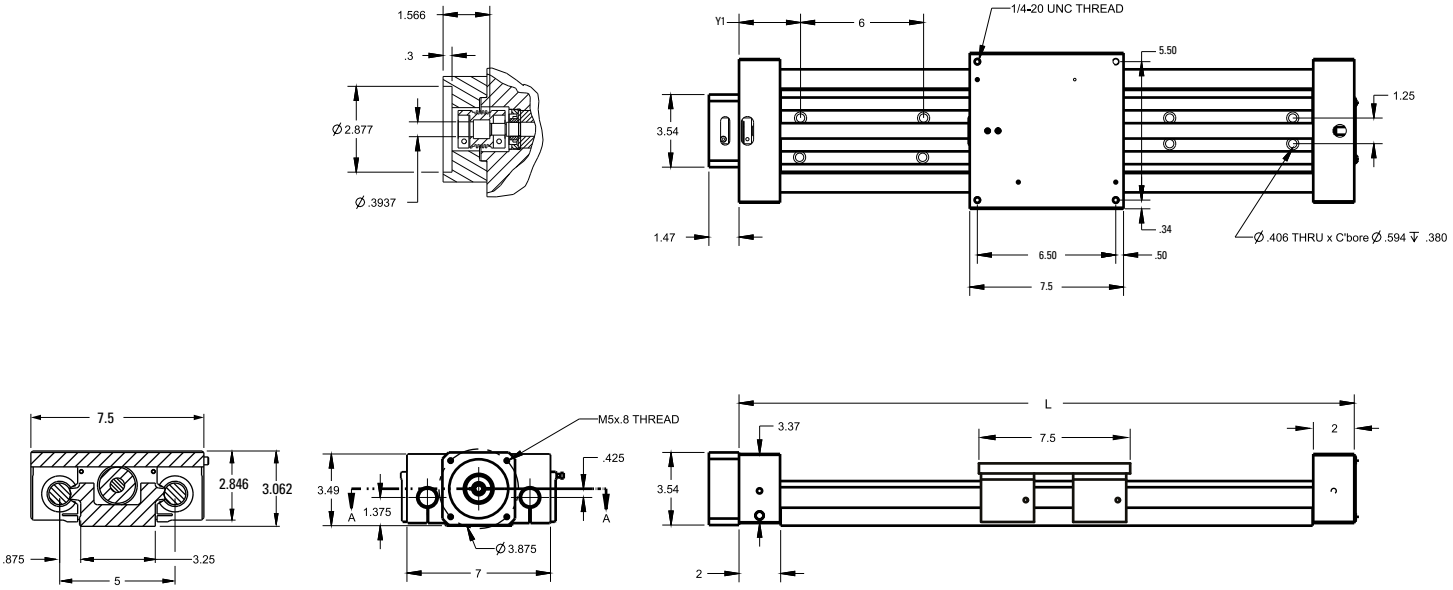

Standard NEMA23 motor dimensions are shown. Other mounting sizes are available and easily configured. Please see www.linearmotioneering.com for details.

Ordering Length (L) and Maximum Stroke (Smax)
L = Smax + 11.5

Linear Motion Systems with Ball Screw Drive and Slide Guide

Overview

Movopart M

M75

Features

- Can be installed in any orientation
- Self-adjusting stainless steel cover band
- Patented internal self-adjusting prism slide guides
- Wash down protected versions available.

Parameter		M55	M75	M100
Profile size (width × height)	[mm]	58 × 55	86 × 75	108 × 100
Stroke length (Smax), maximum	[mm]	3000	4000	6000
Linear speed, maximum	[m/s]	1,0	1,6	1,6
Dynamic carriage load (Fz), maximum	[N]	400	1485	3005
Remarks		single ball nut	single ball nut	single ball nut
Page		70	72	74

Linear Motion Systems with Ball Screw Drive and Slide Guide

Overview

M-Series Technical Presentation

Cover band
The self-adjusting magnetically sealed stainless steel cover band protects the unit from the penetration of dirt, dust and liquids.

Environmental protection
The standard unit can operate in harsh environments but is also available in a wash down version for environments that are dusty, dirty and/or wet.

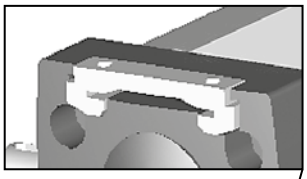

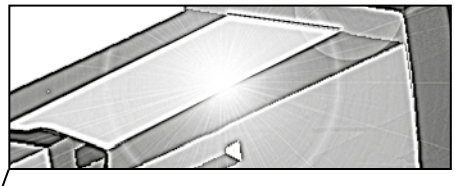

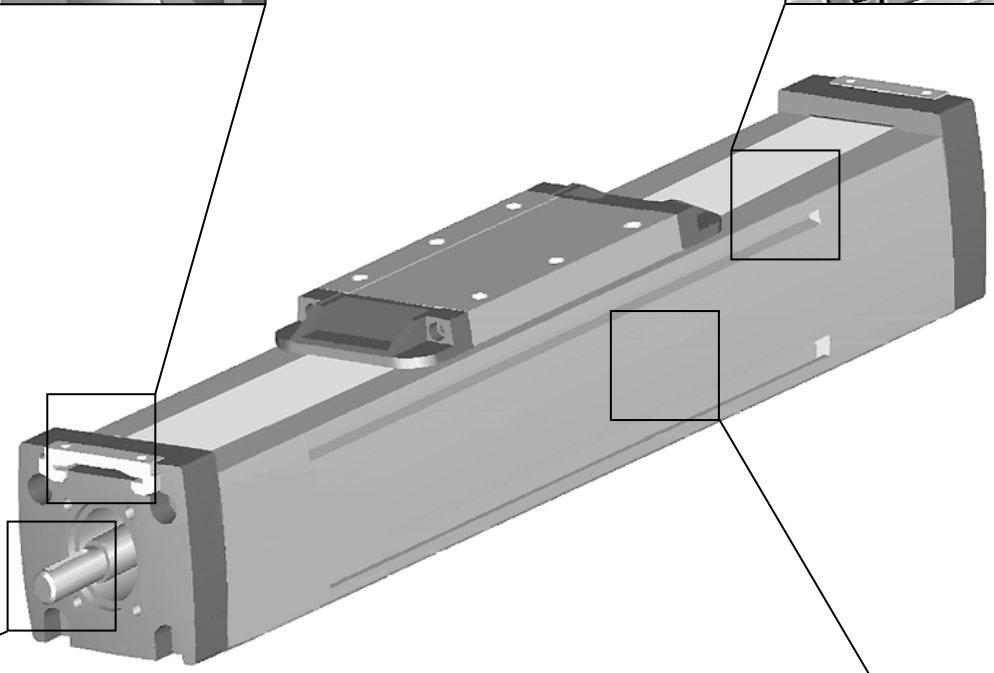

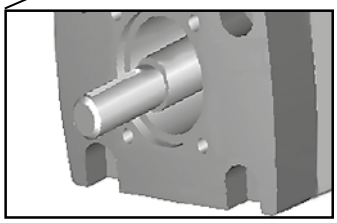

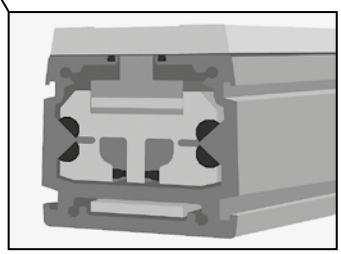

Ball screw drive
The ball screw ensures high accuracy and efficiency and the optional screw supports enable higher speeds.

Prism slide guides
The patented self-aligning prism slide guides are accurate, durable and are resistant to vibrations and shock loads.

M55

Ball Screw Drive, Slide Guide

» Ordering key - see page 195
» Accessories - see page 131
» Additional data - see page 179

General Specifications

Parameter	M55
Profile size (w × h) [mm]	58 × 55
Type of screw	ball screw with single nut
Carriage sealing system	self-adjusting steel cover band
Screw supports	number of screw supports to be specified by customer at order
Lubrication	lubrication of ball screw
Included accessories	none

Performance Specifications

for Units with Single Standard Carriage (A)[1]

Parameter		M55
Stroke length (Smax), maximum	[mm]	3000
Linear speed, maximum	[m/s]	1,0
Acceleration, maximum	[m/s²]	8
Repeatability	[± mm]	0,05
Input speed, maximum	[rpm]	3000
Operation temperature limits	[°C]	-20 – 70
Dynamic load (Fx), maximum	[N]	1000
Dynamic load (Fy), maximum	[N]	400
Dynamic load (Fz), maximum	[N]	400
Dynamic load torque (Mx), maximum	[Nm]	9
Dynamic load torque (My), maximum	[Nm]	23
Dynamic load torque (Mz), maximum	[Nm]	23
Drive shaft force (Frd), maximum	[N]	200
Drive shaft torque (Mta), maximum	[Nm]	12
Screw diameter (d0)	[mm]	16
Screw lead (p)	[mm]	5, 10, 20
Weight	[kg]	
of unit with zero stroke		3,06
of every 100 mm of stroke		0,44
of carriage		1,20
of option single screw support		0,83
of option double screw supports		1,88

[1] See next page for deviating values of units with other carriage types.

Carriage Idle Torque (M idle) [Nm]

Input speed [rpm]	Screw lead [mm]		
	p = 5	p = 10	p = 20
500 - no screw supports	0,10	0,15	0,30
500 - with screw supports	0,13	0,27	0,45

M idle = the input torque needed to move the carriage with no load on it.

Deflection of the Profile

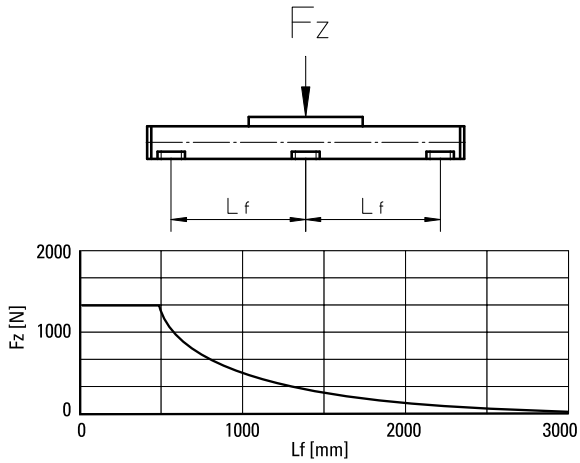

Critical Speed

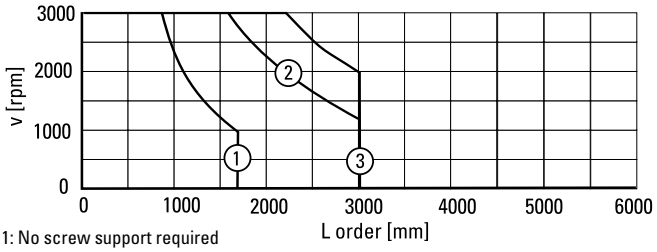

1: No screw support required
2: Single screw support required
3: Double screw supports required

Definition of Forces

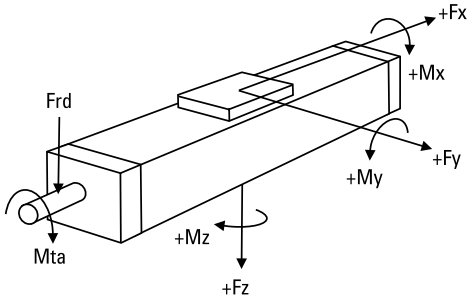

M55

Ball Screw Drive, Slide Guide

Dimensions	Projection
METRIC	

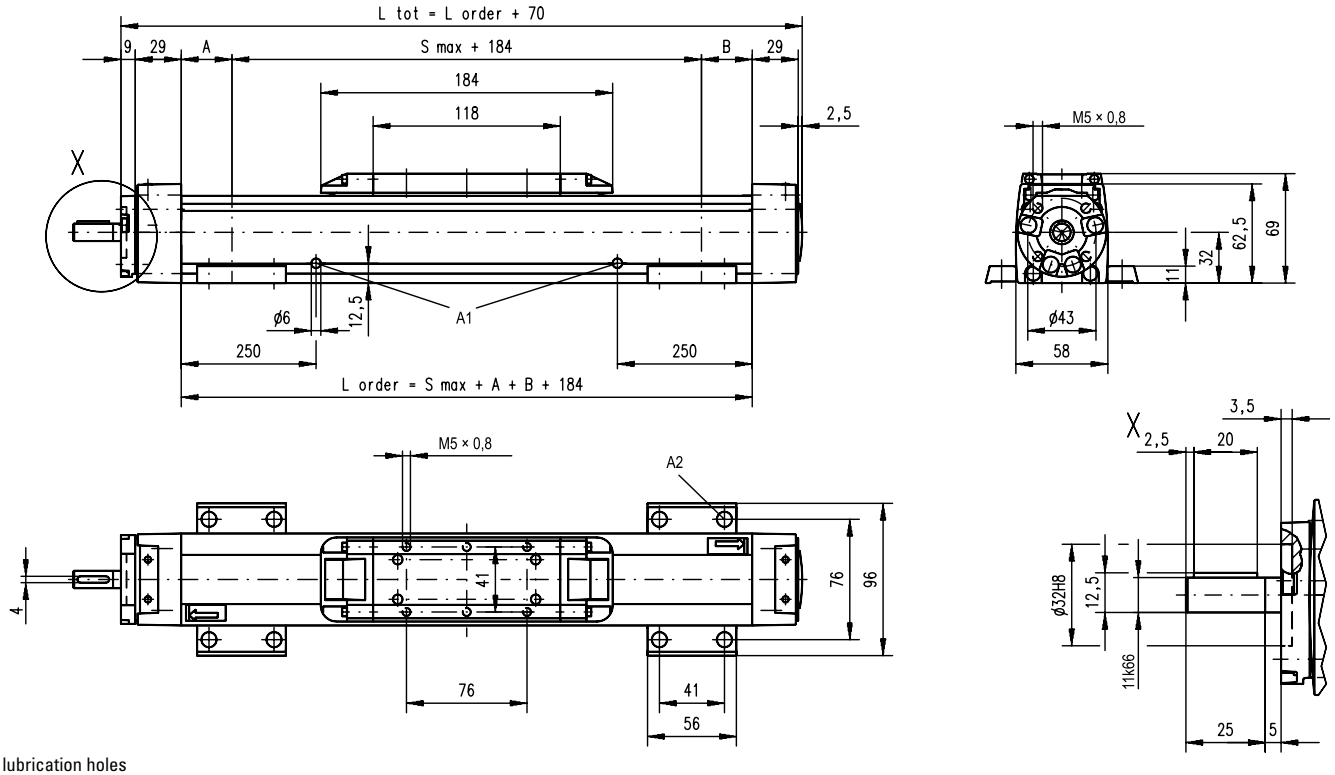

A1: lubrication holes
A2: ø9,5/ø5,5 for socket head cap screw M5

Screw support configuration	A [mm]	B [mm]	Ordering length (L order) [mm]	Total length (L tot) [mm]
No screw support	6	6	L order = Smax + A + B + 184	L tot = L order + 70
Single screw support	32	32	L order = Smax + A + B + 184	L tot = L order + 70
Double screw supports	83	83	L order = Smax + A + B + 184	L tot = L order + 70

Performance Specifications

for Units with Double Standard Carriage (C)

Parameter		M55
Stroke length (Smax), maximum	[mm]	2800
Minimum distance between carriages (Lc)	[mm]	200
Dynamic load (Fy), maximum	[N]	600
Dynamic load (Fz), maximum	[N]	600
Dynamic load torque (My), maximum	[Nm]	Lc[1] × 0,3
Dynamic load torque (Mz), maximum	[Nm]	Lc[1] × 0,3
Force required to move second carriage	[N]	35
Weight	[kg]	
of unit with zero stroke		5,14
of carriages		2,40

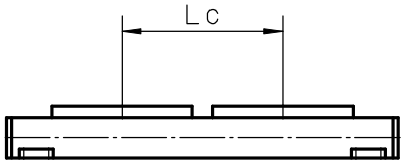

Screw support configuration	A [mm]	B [mm]	Ordering length (L order) [mm]	Total length (L tot) [mm]
No screw support	6	6	L order = Smax + A + B + Lc + 184	L tot = L order + 70
Single screw support	32	32	L order = Smax + A + B + Lc + 184	L tot = L order + 70
Double screw supports	83	83	L order = Smax + A + B + Lc + 184	L tot = L order + 70

[1] Value in mm

M75

Ball Screw Drive, Slide Guide

» Ordering key - see page 195
» Accessories - see page 131
» Additional data - see page 179

General Specifications

Parameter	M75
Profile size (w × h) [mm]	86 × 75
Type of screw	ball screw with single nut
Carriage sealing system	self-adjusting steel cover band
Screw supports	number of screw supports to be specified by customer at order
Lubrication	lubrication of ball screw
Included accessories	none

Performance Specifications

for Units with Single Standard Carriage (A)[1]

Parameter		M75
Stroke length (Smax), maximum	[mm]	4000
Linear speed, maximum	[m/s]	1,6
Acceleration, maximum	[m/s²]	8
Repeatability	[± mm]	0,05
Input speed, maximum	[rpm]	5000
Operation temperature limits	[°C]	-20 – 70
Dynamic load (Fx), maximum	[N]	2500
Dynamic load (Fy), maximum	[N]	1485
Dynamic load (Fz), maximum	[N]	1485
Dynamic load torque (Mx), maximum	[Nm]	49
Dynamic load torque (My), maximum	[Nm]	85
Dynamic load torque (Mz), maximum	[Nm]	85
Drive shaft force (Frd), maximum	[N]	600
Drive shaft torque (Mta), maximum	[Nm]	30
Screw diameter (d0)	[mm]	20
Screw lead (p)	[mm]	5, 12,7, 20
Weight	[kg]	
of unit with zero stroke		6,07
of every 100 mm of stroke		0,82
of carriage		1,70
of option single screw support		1,70
of option double screw supports		3,58

[1] See next page for deviating values of units with other carriage types.

Carriage Idle Torque (M idle) [Nm]

Input speed [rpm]	Screw lead [mm]		
	p = 5	p = 12,7	p = 20
500 - no screw supports	0,10	0,24	0,37
500 - with screw supports	0,15	0,39	0,57

M idle = the input torque needed to move the carriage with no load on it.

Deflection of the Profile

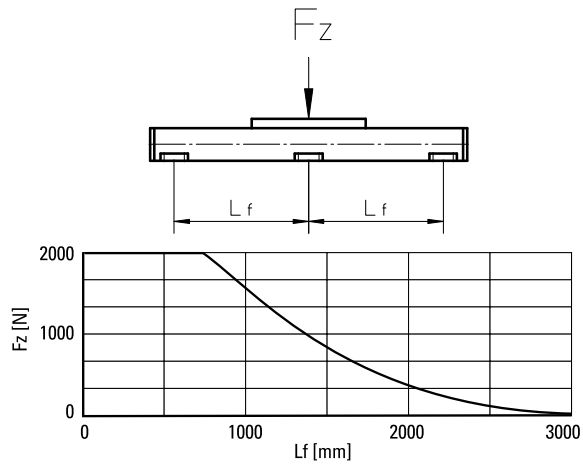

Critical Speed

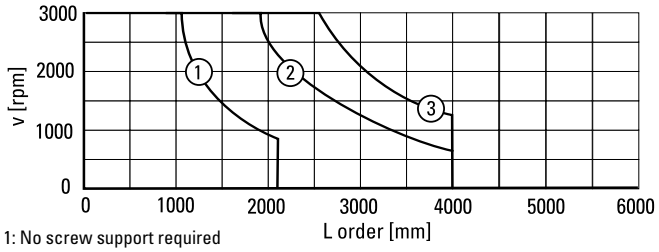

1: No screw support required
2: Single screw support required
3: Double screw supports required

Definition of Forces

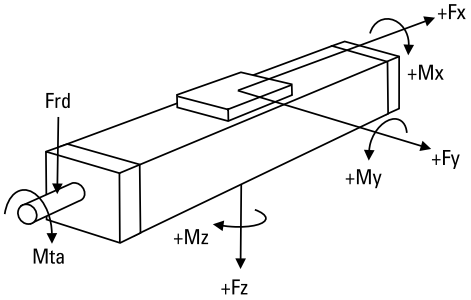

M75

Ball Screw Drive, Slide Guide

Dimensions	Projection
METRIC	

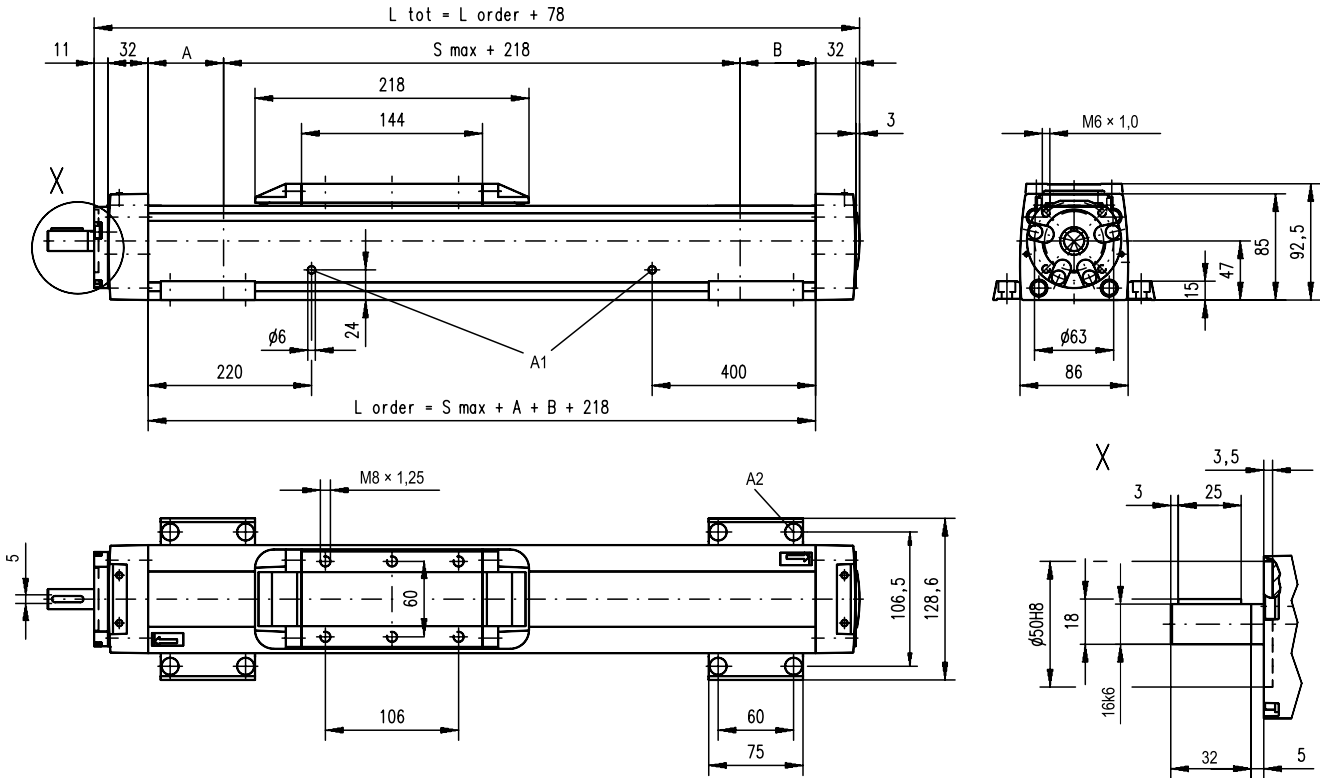

A1: lubrication holes
A2: ø13,5/ø8,5 for socket head cap screw M8

Screw support configuration	A [mm]	B [mm]	Ordering length (L order) [mm]	Total length (L tot) [mm]
No screw support	5	5	L order = Smax + A + B + 218	L tot = L order + 78
Single screw support	60	60	L order = Smax + A + B + 218	L tot = L order + 78
Double screw supports	126	126	L order = Smax + A + B + 218	L tot = L order + 78

Performance Specifications

for Units with Double Standard Carriage (C)

Parameter		M75
Stroke length (Smax), maximum	[mm]	3750
Minimum distance between carriages (Lc)	[mm]	250
Dynamic load (Fy), maximum	[N]	2227
Dynamic load (Fz), maximum	[N]	2227
Dynamic load torque (My), maximum	[Nm]	Lc[1] × 1,114
Dynamic load torque (Mz), maximum	[Nm]	Lc[1] × 1,114
Force required to move second carriage	[N]	40
Weight of unit with zero stroke of carriages	[kg]	 9,82 3,40

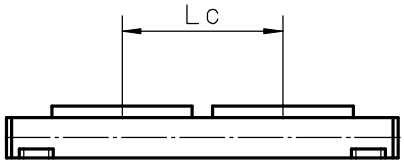

Screw support configuration	A [mm]	B [mm]	Ordering length (L order) [mm]	Total length (L tot) [mm]
No screw support	5	5	L order = Smax + A + B + Lc + 218	L tot = L order + 78
Single screw support	60	60	L order = Smax + A + B + Lc + 218	L tot = L order + 78
Double screw supports	126	126	L order = Smax + A + B + Lc + 218	L tot = L order + 78

[1] Value in mm

M100

Ball Screw Drive, Slide Guide

» Ordering key - see page 195
» Accessories - see page 131
» Additional data - see page 179

General Specifications

Parameter	M100
Profile size (w × h) [mm]	108 × 100
Type of screw	ball screw with single nut
Carriage sealing system	self-adjusting steel cover band
Screw supports	number of screw supports to be specified by customer at order
Lubrication	lubrication of ball screw
Included accessories	none

Performance Specifications

for Units with Single Standard Carriage (A)[1]

Parameter		M100
Stroke length (Smax), maximum	[mm]	6000
Linear speed, maximum	[m/s]	1,6
Acceleration, maximum	[m/s²]	8
Repeatability	[± mm]	0,05
Input speed, maximum	[rpm]	4000
Operation temperature limits	[°C]	-20 – 70
Dynamic load (Fx), maximum	[N]	5000
Dynamic load (Fy), maximum	[N]	3005
Dynamic load (Fz), maximum	[N]	3005
Dynamic load torque (Mx), maximum	[Nm]	117
Dynamic load torque (My), maximum	[Nm]	279
Dynamic load torque (Mz), maximum	[Nm]	279
Drive shaft force (Frd), maximum	[N]	1000
Drive shaft torque (Mta), maximum	[Nm]	45
Screw diameter (d0)	[mm]	25
Screw lead (p)	[mm]	5, 10, 25
Weight	[kg]	
of unit with zero stroke		12,87
of every 100 mm of stroke		1,42
of carriage		3,50
of option single screw support		1,86
of option double screw supports		4,42

[1] See next page for deviating values of units with other carriage types.

Carriage Idle Torque (M idle) [Nm]

Input speed [rpm]	Screw lead [mm]		
	p = 5	p = 10	p = 25
500 - no screw supports	0,15	0,25	0,55
500 - with screw supports	0,25	0,40	0,85

M idle = the input torque needed to move the carriage with no load on it.

Deflection of the Profile

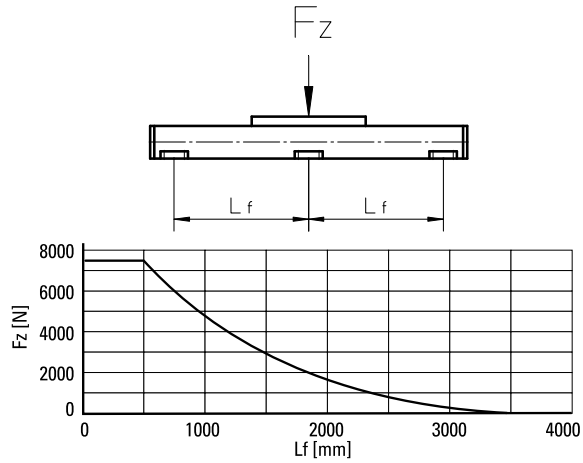

Critical Speed

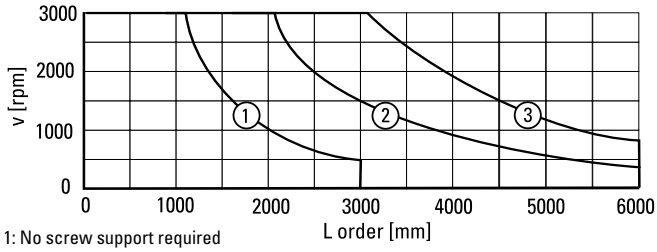

1: No screw support required
2: Single screw support required
3: Double screw supports required

Definition of Forces

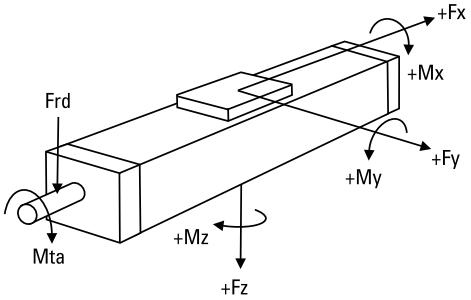

M100

Ball Screw Drive, Slide Guide

Dimensions	Projection
METRIC	

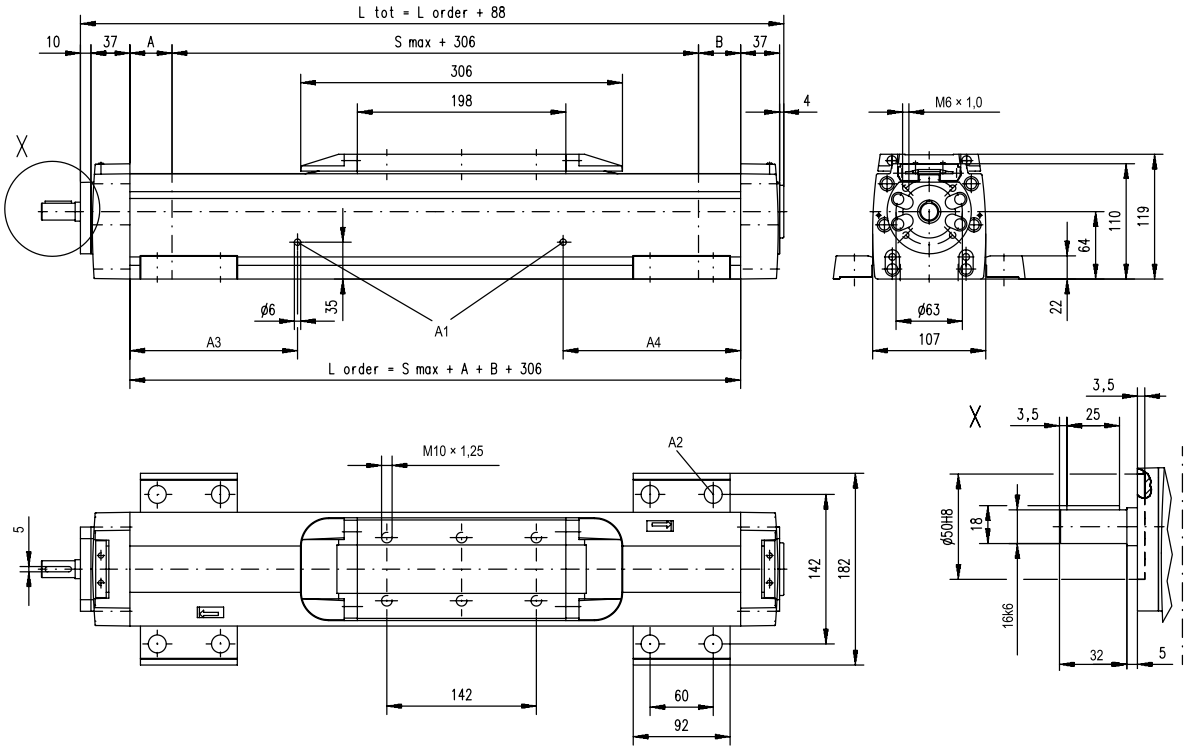

A1: lubrication holes
A2: ø17/ø10,5 for socket head cap screw M10

A3: 100 (L order <= 1 m), 320 (L order > 1 m)
A4: 100 (L order <= 1 m), 430 (L order > 1 m)

Screw support configuration	A [mm]	B [mm]	Ordering length (L order) [mm]	Total length (L tot) [mm]
No screw support	1	1	L order = Smax + A + B + 306	L tot = L order + 88
Single screw support	31	31	L order = Smax + A + B + 306	L tot = L order + 88
Double screw supports	86	86	L order = Smax + A + B + 306	L tot = L order + 88

Performance Specifications

for Units with Double Standard Carriage (C)

Parameter		M100
Stroke length (Smax), maximum	[mm]	5650
Minimum distance between carriages (Lc)	[mm]	350
Dynamic load (Fy), maximum	[N]	4508
Dynamic load (Fz), maximum	[N]	4508
Dynamic load torque (My), maximum	[Nm]	Lc[1] × 2,254
Dynamic load torque (Mz), maximum	[Nm]	Lc[1] × 2,254
Force required to move second carriage	[N]	45
Weight of unit with zero stroke of carriages	[kg]	 21,34 7,00

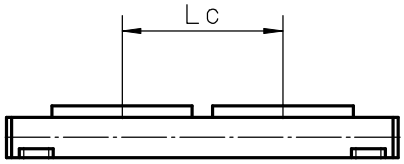

Screw support configuration	A [mm]	B [mm]	Ordering length (L order) [mm]	Total length (L tot) [mm]
No screw support	1	1	L order = Smax + A + B + Lc + 306	L tot = L order + 88
Single screw support	31	31	L order = Smax + A + B + Lc + 306	L tot = L order + 88
Double screw supports	86	86	L order = Smax + A + B + Lc + 306	L tot = L order + 88

[1] Value in mm

Linear Motion Systems with Belt Drive and Ball Guide

Overview

SpeedLine WH

WH40

Features
- Can be installed in any orientation
- Stroke up to 2 m
- Acceleration up to 40 m/s²
- Compact

Parameter		WH40
Profile size (width × height)	[mm]	40 × 40
Stroke length (Smax), maximum	[mm]	2000
Linear speed, maximum	[m/s]	3,0
Dynamic carriage load (Fz), maximum	[N]	600
Remarks		no cover band
Page		78

PowerLine WMZ

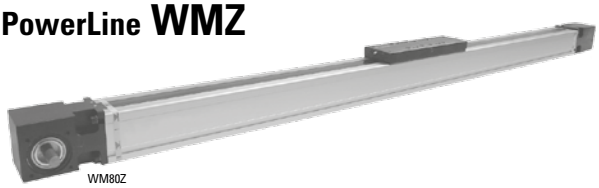
WM80Z

Features
- Can be installed in any orientation
- Stroke up to 5,5 m
- Speed up to 5 m/s
- Patented plastic cover band

Parameter		WM60Z	WM80Z
Profile size (width × height)	[mm]	60 × 60	80 × 80
Stroke length (Smax), maximum	[mm]	4000	5500
Linear speed, maximum	[m/s]	2,5	5,0
Dynamic carriage load (Fz), maximum	[N]	1400	2100
Remarks		-	-
Page		80	82, 84

Movopart M

M75

Features
- Can be installed in any orientation
- Self-adjusting stainless steel cover band
- Stroke up to 12 m
- Wash down protected versions available.

Parameter		M55	M75	M100
Profile size (width × height)	[mm]	58 × 55	86 × 75	108 × 100
Stroke length (Smax), maximum	[mm]	7000	12000	12000
Linear speed, maximum	[m/s]	5,0	5,0	5,0
Dynamic carriage load (Fz), maximum	[N]	750	1750	4000
Remarks		-	-	-
Page		86	88	90

Linear Motion Systems with Belt Drive and Ball Guide

Overview

ForceLine **MLSM**

MLSM80Z

Features

- Can be installed in any orientation
- Patented plastic cover band
- High load capabilities
- Low profile height

Parameter		MLSM80Z
Profile size (width × height)	[mm]	240 × 85
Stroke length (Smax), maximum	[mm]	5900
Linear speed, maximum	[m/s]	5,0
Dynamic carriage load (Fz), maximum	[N]	6400
Remarks		-
Page		92

WMZ-Series Technical Presentation

Cover band
The cover band protects the interior of the unit from the penetration of dirt, dust and liquids.

Central lubrication
One central lubrication point on the carriage services the entire unit resulting in a minimum maintenance requirement.

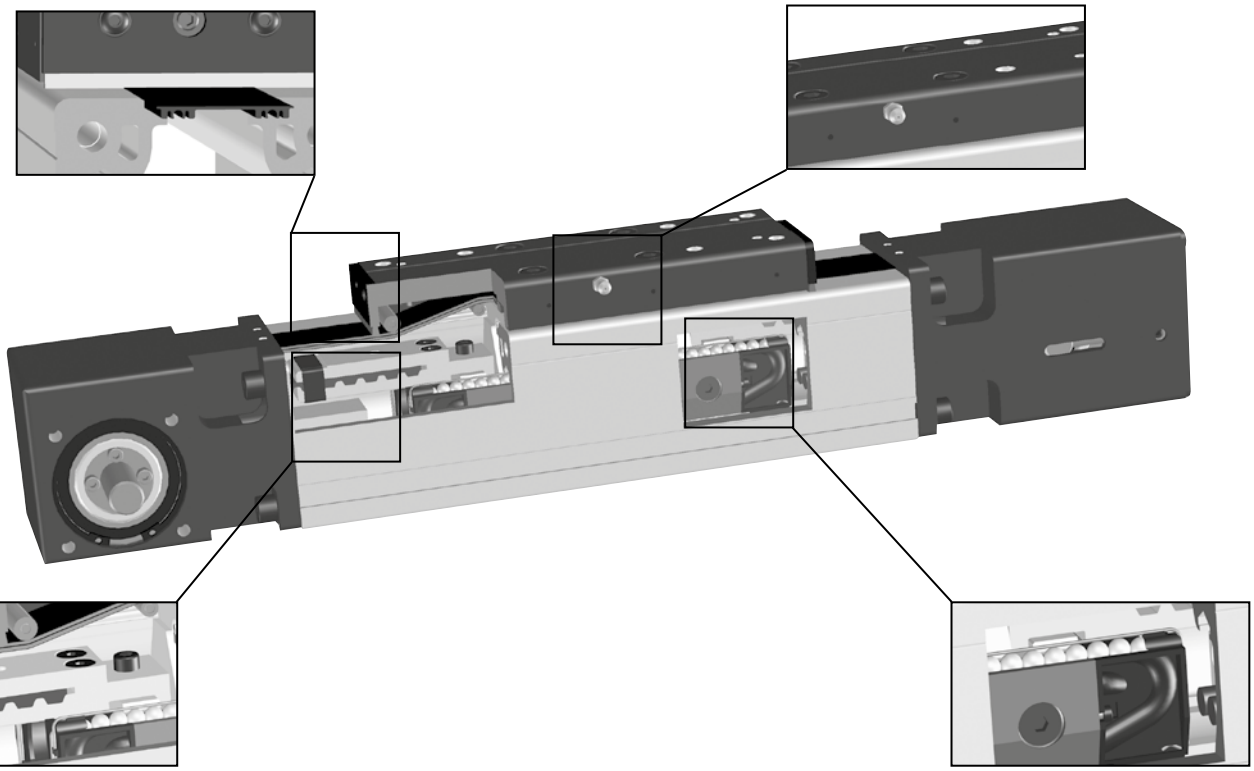

Belt drive
The belt is protected from the outside ensuring long, accurate and safe operation.

Ball guides
Integrated patented ball guides with hardened steel tracks for optimum performance.

WH40

Belt Drive, Ball Guide

» Ordering key - see page 196
» Accessories - see page 131
» Additional data - see page 179

General Specifications

Parameter	WH40
Profile size (w × h) [mm]	40 × 40
Type of belt	10 AT 5
Carriage sealing system	none
Adjustable belt tensioning	the belt can be retensioned by the customer if necessary
Lubrication	central lubrication of all parts that require lubrication
Included accessories	4 × mounting clamps

Performance Specifications

for Units with Single Standard Carriage (N)[1]

Parameter		WH40
Stroke length (Smax), maximum	[mm]	2000
Total length (L tot), maximum	[mm]	2265
Linear speed, maximum	[m/s]	3,0
Acceleration, maximum	[m/s²]	40
Repeatability	[± mm]	0,05
Input speed, maximum	[rpm]	1800
Operation temperature limits	[°C]	0 – 80
Dynamic load (Fx), maximum	[N]	315 [2]
Dynamic load (Fy), maximum	[N]	450
Dynamic load (Fz), maximum	[N]	600
Dynamic load torque (Mx), maximum	[Nm]	10
Dynamic load torque (My), maximum	[Nm]	30
Dynamic load torque (Mz), maximum	[Nm]	30
Drive shaft force (Frd), maximum	[N]	100
Drive shaft torque (Mta), maximum	[Nm]	6
Pulley diameter	[mm]	31,83
Stroke per shaft revolution	[mm]	100
Weight	[kg]	
of unit with zero stroke		1,19
of every 100 mm of stroke		0,15
of each carriage		0,28

[1] See next page for deviating values of units with other carriage types.
[2] See diagram Force Fx.

Carriage Idle Torque, (M idle) [Nm]

Input speed [rpm]	Idle torque [Nm]
150	0,1
900	0,3
1800	0,6

M idle = the input torque needed to move the carriage with no load on it.

Deflection of the Profile

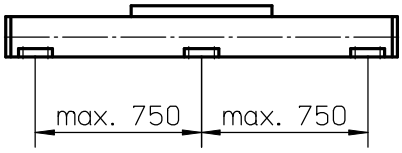

A mounting clamp must be installed at least every 750 mm to be able to operate at maximum load. Less clamps may be required if less load is being operated, see the additional technical data for more information.

Force Fx as a Function of the Speed

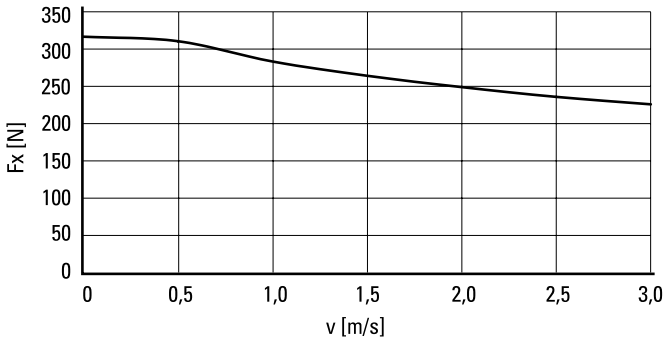

Definition of Forces

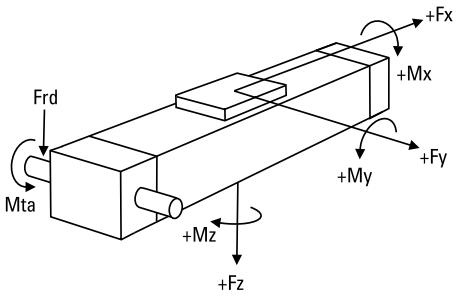

WH40

Belt Drive, Ball Guide

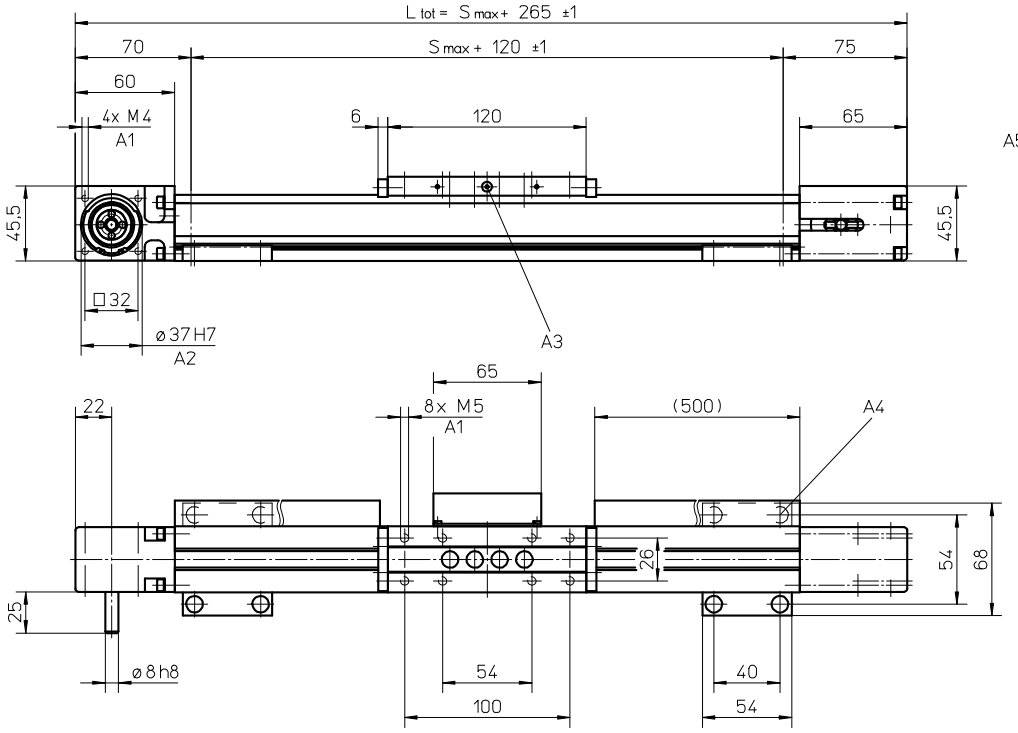

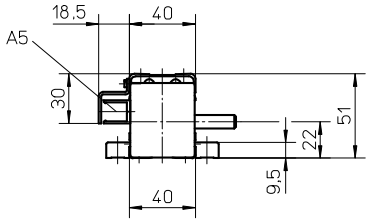

A1: depth 10
A2: depth 3
A3: lubricating nipple on both sides

A4: socket cap screw ISO4762-M5×12 8.8
A5: ENF inductive sensor rail kit (optional - see page 172)

Performance Specifications
for Units with Single Long Carriage (L)

Parameter		WH40
Stroke length (Smax), maximum	[mm]	2000
Total length (L tot), maximum	[mm]	2355
Carriage length	[mm]	210
Dynamic load torque (My), maximum	[Nm]	50
Dynamic load torque (Mz), maximum	[Nm]	50
Weight	[kg]	0,43

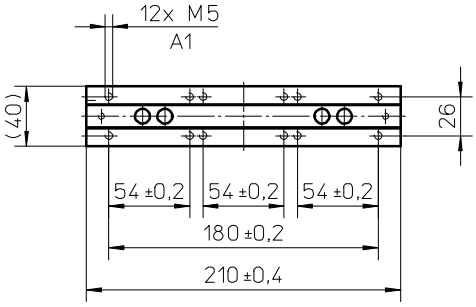

A1: depth 10

Performance Specifications
for Units with Double Standard Carriage (Z)

Parameter		WH40
Stroke length (Smax), maximum	[mm]	1955
Total length (L tot), maximum	[mm]	2355
Minimum distance between carriages (L_A)	[mm]	135
Dynamic load (Fy), maximum	[N]	900
Dynamic load (Fz), maximum	[N]	1200
Dynamic load torque (My), maximum	[Nm]	L_A[1] × 0,45
Dynamic load torque (Mz), maximum	[Nm]	L_A[1] × 0,60
Force required to move second carriage	[N]	2
Total length (L tot)	[mm]	Smax + 265 + L_A

[1] Value in mm

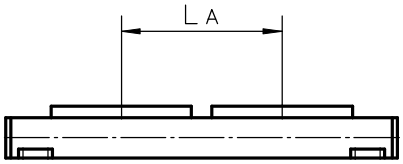

WM60Z

Belt Drive, Ball Guide, Short Carriage

» Ordering key - see page 197
» Accessories - see page 131
» Additional data - see page 179

General Specifications

Parameter	WM60Z
Profile size (w × h) [mm]	60 × 60
Type of belt	20 ATL 5
Carriage sealing system	plastic cover band
Adjustable belt tensioning	the belt can be retensioned by the customer if necessary
Lubrication	central lubrication of all parts that require lubrication
Included accessories	4 × mounting clamps

Performance Specifications

for Units with Single Short Carriage (S)[1]

Parameter		WM60Z
Stroke length (Smax), maximum	[mm]	4000
Total length (L tot), maximum	[mm]	4420
Linear speed, maximum	[m/s]	2,5
Acceleration, maximum	[m/s²]	20
Repeatability	[± mm]	0,05
Input speed, maximum	[rpm]	1250
Operation temperature limits	[°C]	0 – 80
Dynamic load (Fx), maximum	[N]	850
Dynamic load (Fy), maximum	[N]	1400 [2]
Dynamic load (Fz), maximum	[N]	1400
Dynamic load torque (Mx), maximum	[Nm]	25
Dynamic load torque (My), maximum	[Nm]	50
Dynamic load torque (Mz), maximum	[Nm]	50
Drive shaft force (Frd), maximum	[N]	150
Drive shaft torque (Mta), maximum	[Nm]	17
Pulley diameter	[mm]	38,20
Stroke per shaft revolution	[mm]	120
Weight	[kg]	
of unit with zero stroke		4,30
of every 100 mm of stroke		0,45
of each carriage		1,25

[1] See next page for deviating values of units with other carriage types.
[2] See diagram Force Fx.

Carriage Idle Torque, (M idle) [Nm]

Input speed [rpm]	Idle torque [Nm]
150	1,6
600	2,5
1250	3,0

M idle = the input torque needed to move the carriage with no load on it.

Deflection of the Profile

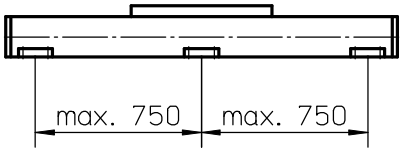

A mounting clamp must be installed at least every 750 mm to be able to operate at maximum load. Less clamps may be required if less load is being operated, see the additional technical data for more information.

Force Fx as a Function of the Speed

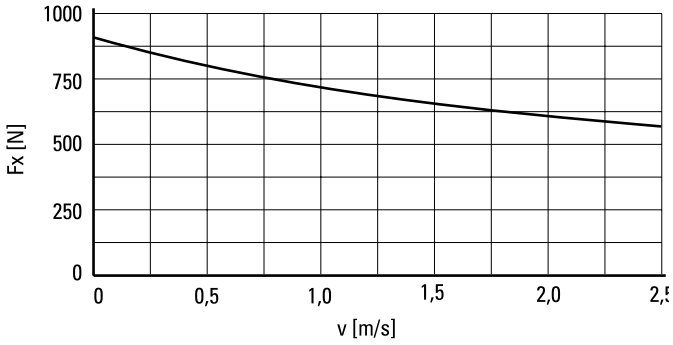

Definition of Forces

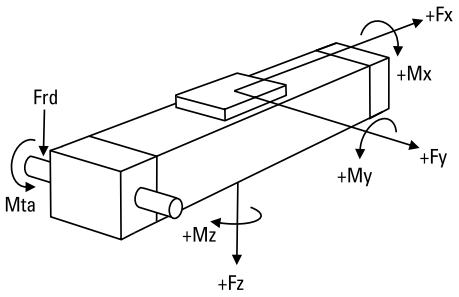

WM60Z

Belt Drive, Ball Guide, Short Carriage

Dimensions	Projection
METRIC	

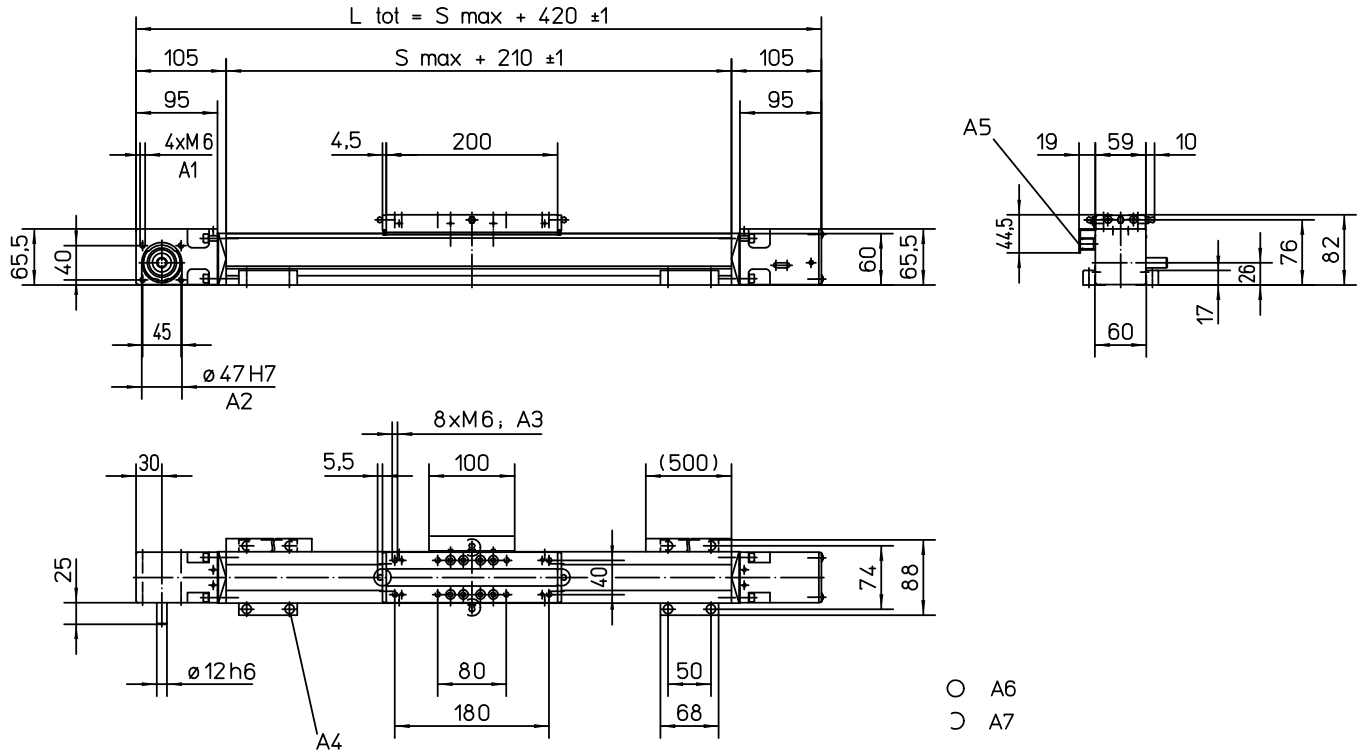

A1: depth 15
A2: depth 4
A3: depth 11
A4: socket cap screw ISO4762-M6×20 8.8

A5: ENF inductive sensor rail kit (optional - see page 172)
A6: tapered lubricating nipple to DIN71412 AM6 on fixed-bearing side as standard feature
A7: can be changed over to one of three alternative lubrications points by the customer

Performance Specifications

for Units with Double Short Carriage (Y)

Parameter		WM60Z
Stroke length (Smax), maximum	[mm]	3745
Total length (L tot), maximum	[mm]	4420
Minimum distance between carriages (L_A)	[mm]	255
Dynamic load (Fy), maximum	[N]	2800
Dynamic load (Fz), maximum	[N]	2800
Dynamic load torque (My), maximum	[Nm]	L_A[1] × 1,4
Dynamic load torque (Mz), maximum	[Nm]	L_A[1] × 1,4
Force required to move second carriage	[N]	18
Total length (L tot)	[mm]	Smax + 420 + L_A

[1] Value in mm

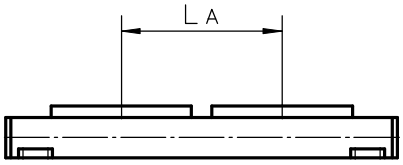

WM80Z

Belt Drive, Ball Guide, Standard Carriage

» Ordering key - see page 197
» Accessories - see page 131
» Additional data - see page 179

General Specifications

Parameter	WM80Z
Profile size (w × h) [mm]	80 × 80
Type of belt	25 AT 10
Carriage sealing system	plastic cover band
Adjustable belt tensioning	the belt can be retensioned by the customer if necessary
Lubrication	central lubrication of all parts that require lubrication
Included accessories	4 × mounting clamps

Performance Specifications

for Units with Single Standard Carriage (N)[1]

Parameter		WM80Z
Stroke length (Smax), maximum	[mm]	5400
Total length (L tot), maximum	[mm]	5990
Linear speed, maximum	[m/s]	2,5
Acceleration, maximum	[m/s²]	20
Repeatability	[± mm]	0,05
Input speed, maximum	[rpm]	885
Operation temperature limits	[°C]	0 – 80
Dynamic load (Fx), maximum	[N]	1470
Dynamic load (Fy), maximum	[N]	3000 [2]
Dynamic load (Fz), maximum	[N]	3000
Dynamic load torque (Mx), maximum	[Nm]	150
Dynamic load torque (My), maximum	[Nm]	300
Dynamic load torque (Mz), maximum	[Nm]	300
Drive shaft force (Frd), maximum	[N]	600
Drive shaft torque (Mta), maximum	[Nm]	40
Pulley diameter	[mm]	54,11
Stroke per shaft revolution	[mm]	170
Weight	[kg]	
of unit with zero stroke		11,2
of every 100 mm of stroke		0,8
of each carriage		3,4

[1] See next page for deviating values of units with other carriage types.
[2] See diagram Force Fx.

Carriage Idle Torque, (M idle) [Nm]

Input speed [rpm]	Idle torque [Nm]
150	6,5
450	7,7
885	9,3

M idle = the input torque needed to move the carriage with no load on it.

Deflection of the Profile

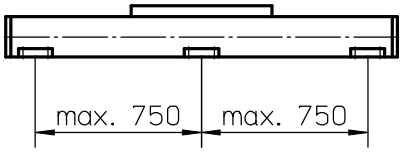

A mounting clamp must be installed at least every 750 mm to be able to operate at maximum load. Less clamps may be required if less load is being operated, see the additional technical data for more information.

Force Fx as a Function of the Speed

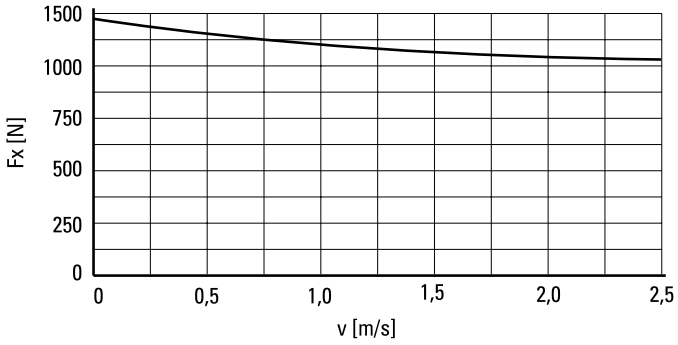

Definition of Forces

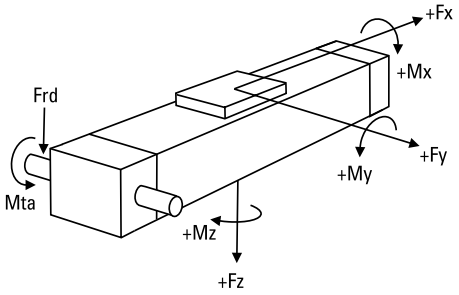

WM80Z

Belt Drive, Ball Guide, Standard Carriage

Dimensions	Projection
METRIC	

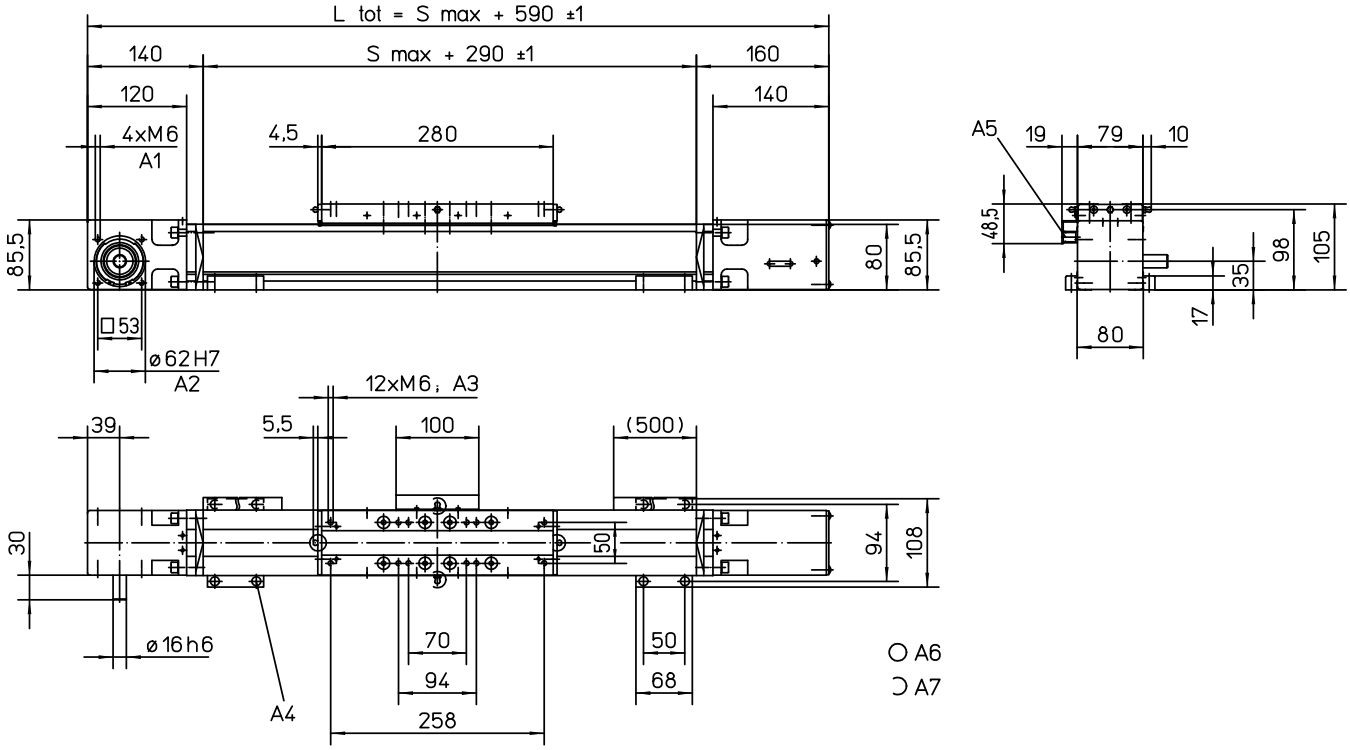

A1: depth 15
A2: depth 2,5
A3: depth 12
A4: socket cap screw ISO4762-M6×20 8.8

A5: ENF inductive sensor rail kit (optional - see page 172)
A6: tapered lubricating nipple to DIN71412 AM6 on fixed-bearing side as standard feature
A7: can be changed over to one of three alternative lubrications points by the customer

Performance Specifications
for Units with Single Long Carriage (L)

Parameter		WM80Z
Stroke length (Smax), maximum	[mm]	5400
Total length (L tot), maximum	[mm]	6160
Carriage length	[mm]	450
Dynamic load torque (My), maximum	[Nm]	750
Dynamic load torque (Mz), maximum	[Nm]	750
Weight	[kg]	5,1

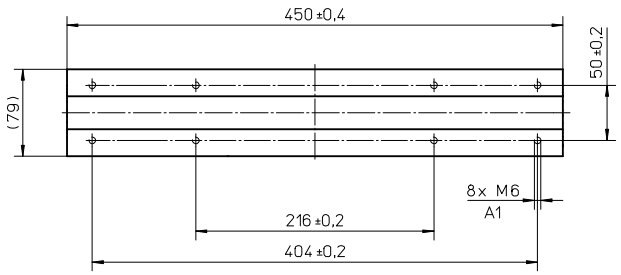

A1: depth 12 mm

Performance Specifications
for Units with Double Standard Carriage (Z)

Parameter		WM80Z
Stroke length (Smax), maximum	[mm]	5040
Total length (L tot), maximum	[mm]	5990
Minimum distance between carriages (L_A)	[mm]	360
Dynamic load (Fy), maximum	[N]	6000
Dynamic load (Fz), maximum	[N]	6000
Dynamic load torque (My), maximum	[Nm]	L_A[1] × 3
Dynamic load torque (Mz), maximum	[Nm]	L_A[1] × 3
Force required to move second carriage	[N]	25
Total length (L tot)	[mm]	Smax + 590 + L_A

[1] Value in mm

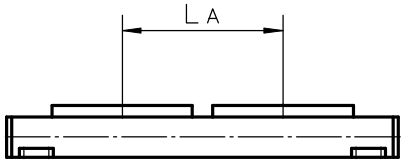

WM80Z

Belt Drive, Ball Guide, Short Carriage

» Ordering key - see page 197
» Accessories - see page 131
» Additional data - see page 179

General Specifications

Parameter	WM80Z
Profile size (w × h) [mm]	80 × 80
Type of belt	25 AT 10
Carriage sealing system	plastic cover band
Adjustable belt tensioning	the belt can be retensioned by the customer if necessary
Lubrication	central lubrication of all parts that require lubrication
Included accessories	4 × mounting clamps

Performance Specifications

for Units with Single Short Carriage (S)[1]

Parameter		WM80Z
Stroke length (Smax), maximum	[mm]	5500
Total length (L tot), maximum	[mm]	5990
Linear speed, maximum	[m/s]	2,5
Acceleration, maximum	[m/s²]	20
Repeatability	[± mm]	0,05
Input speed, maximum	[rpm]	885
Operation temperature limits	[°C]	0 – 80
Dynamic load (Fx), maximum	[N]	1470
Dynamic load (Fy), maximum	[N]	2100 [2]
Dynamic load (Fz), maximum	[N]	2100
Dynamic load torque (Mx), maximum	[Nm]	68
Dynamic load torque (My), maximum	[Nm]	135
Dynamic load torque (Mz), maximum	[Nm]	135
Drive shaft force (Frd), maximum	[N]	600
Drive shaft torque (Mta), maximum	[Nm]	40
Pulley diameter	[mm]	54,11
Stroke per shaft revolution	[mm]	170
Weight	[kg]	
of unit with zero stroke		9,2
of every 100 mm of stroke		0,8
of each carriage		2,1

[1] See next page for deviating values of units with other carriage types.
[2] See diagram Force Fx.

Carriage Idle Torque, (M idle) [Nm]

Input speed [rpm]	Idle torque [Nm]
150	4,0
450	5,4
885	6,2

M idle = the input torque needed to move the carriage with no load on it.

Deflection of the Profile

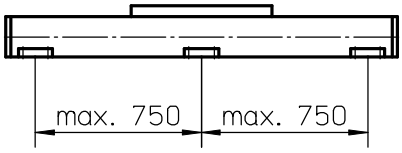

A mounting clamp must be installed at least every 750 mm to be able to operate at maximum load. Less clamps may be required if less load is being operated, see the additional technical data for more information.

Force Fx as a Function of the Speed

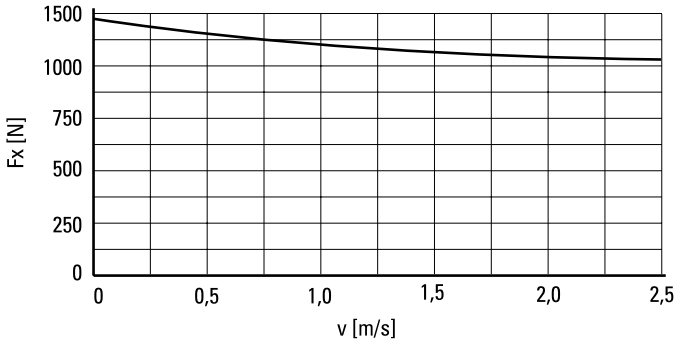

Definition of Forces

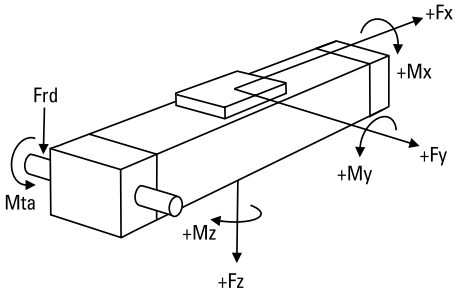

WM80Z

Belt Drive, Ball Guide, Short Carriage

Dimensions	Projection
METRIC	

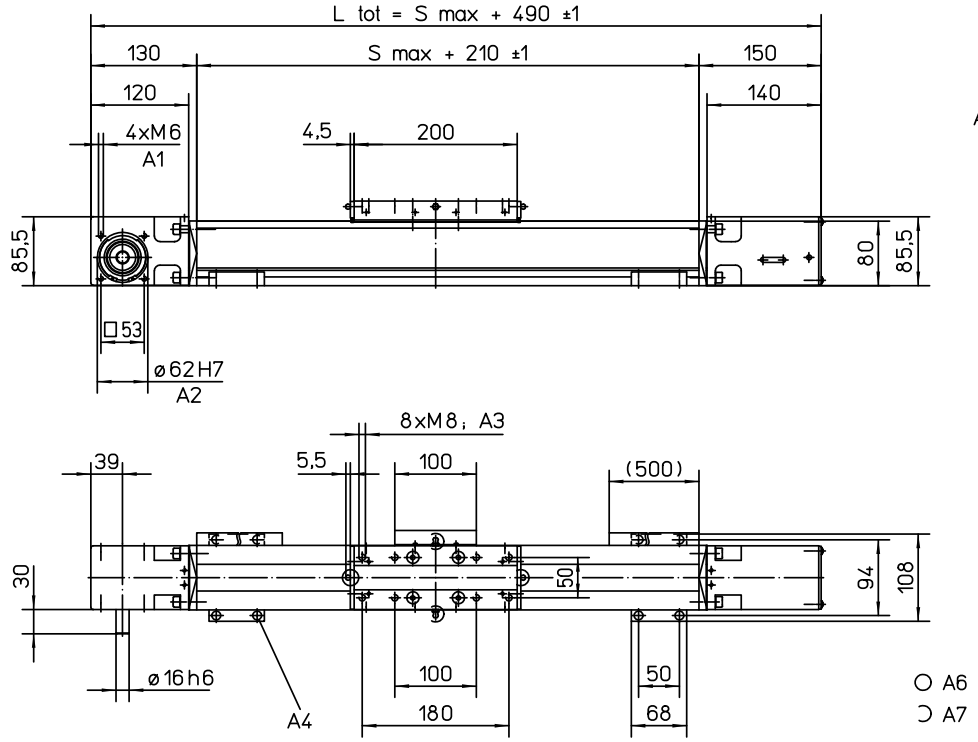

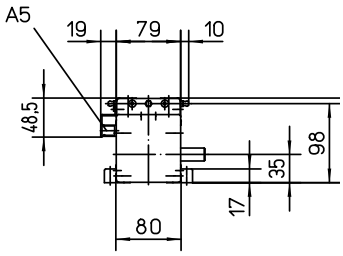

A1: depth 15
A2: depth 2,5
A3: depth 12
A4: socket cap screw ISO4762-M6×20 8.8

A5: ENF inductive sensor rail kit (optional - see page 172)
A6: tapered lubricating nipple to DIN71412 AM6 on fixed-bearing side as standard feature
A7: can be changed over to one of three alternative lubrications points by the customer

Performance Specifications

for Units with Double Short Carriage (Y)[1]

Parameter		WM80Z
Stroke length (Smax), maximum	[mm]	5220
Total length (L tot), maximum	[mm]	5990
Minimum distance between carriages (L_A)	[mm]	280
Dynamic load (Fy), maximum	[N]	4200
Dynamic load (Fz), maximum	[N]	4200
Dynamic load torque (My), maximum	[Nm]	$L_A^1 \times 2,1$
Dynamic load torque (Mz), maximum	[Nm]	$L_A^1 \times 2,1$
Force required to move second carriage	[N]	22,5
Total length (L tot)	[mm]	Smax + 490 + L_A

[1] Value in mm

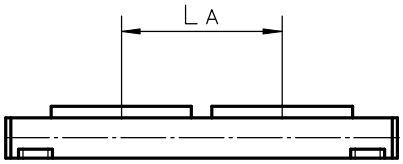

M55

Belt Drive, Ball Guide

» Ordering key - see page 198
» Accessories - see page 131
» Additional data - see page 179

General Specifications

Parameter	M55
Profile size (w × h) [mm]	58 × 55
Type of belt	22-STD SM5-HP
Carriage sealing system	self-adjusting steel cover band
Adjustable belt tensioning	the belt can be retensioned by the customer if necessary
Lubrication	lubrication of ball guide carriages
Included accessories	none

Performance Specifications

for Units with Single Standard Carriage (A)[1]

Parameter		M55
Stroke length (Smax), maximum	[mm]	7000
Linear speed, maximum	[m/s]	5,0
Acceleration, maximum	[m/s²]	40
Repeatability	[± mm]	0,1
Input speed, maximum	[rpm]	2850
Operation temperature limits	[°C]	-20 – 70
Dynamic load (Fx), maximum	[N]	
< 2,5 m/s		400
> 2,5 m/s		200
Dynamic load (Fy), maximum	[N]	750
Dynamic load (Fz), maximum	[N]	750
Dynamic load torque (Mx), maximum	[Nm]	5
Dynamic load torque (My), maximum	[Nm]	29
Dynamic load torque (Mz), maximum	[Nm]	29
Drive shaft force (Frd), maximum	[N]	200
Drive shaft torque (Mta), maximum	[Nm]	12
Pulley diameter	[mm]	33,42
Stroke per shaft revolution	[mm]	105
Weight	[kg]	
of unit with zero stroke		4,80
of every 100 mm of stroke		0,53
of carriage		1,20

[1] See next page for deviating values of units with other carriage types.

Carriage Idle Torque (M idle) [Nm]

Input speed [rpm]	Single Carriage	Double Carriages
150	1,0	1,9

M idle = the input torque needed to move the carriage with no load on it.

Deflection of the Profile

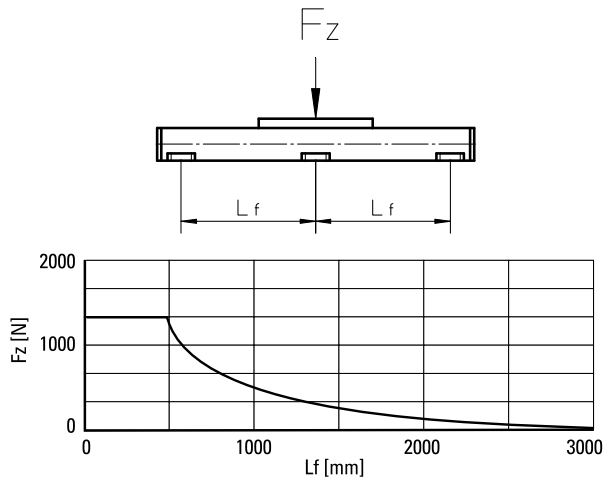

Definition of Forces

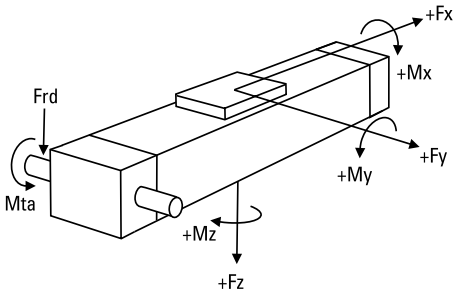

M55

Belt Drive, Ball Guide

Dimensions	Projection
METRIC	

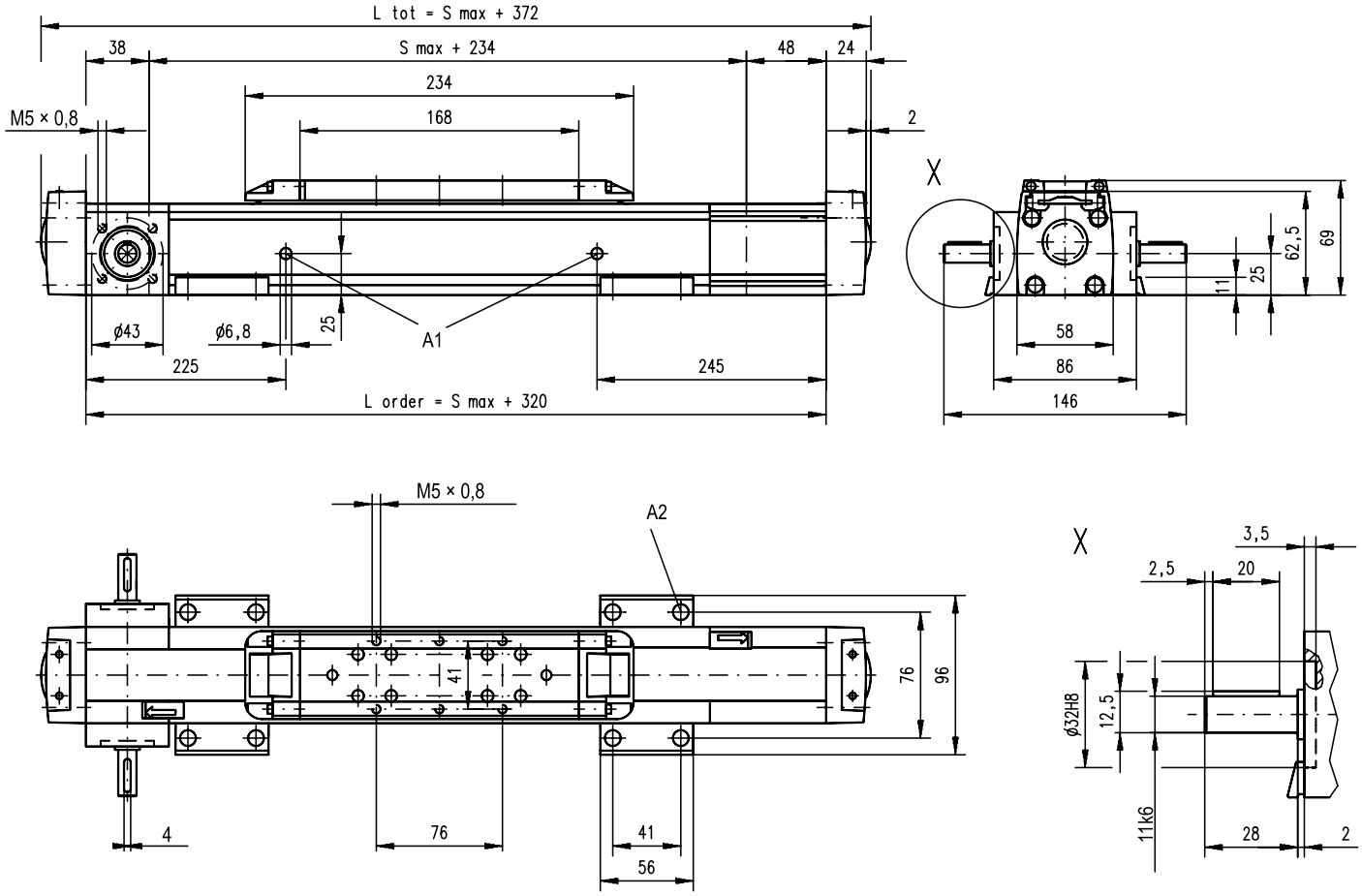

A1: lubrication holes
A2: ø9,5/ø5,5 for socket head cap screw M5

Performance Specifications

for Units with Double Standard Carriage (C)

Parameter		M55
Stroke length (Smax), maximum	[mm]	6750
Minimum distance between carriages (Lc)	[mm]	250
Dynamic load (Fy), maximum	[N]	1125
Dynamic load (Fz), maximum	[N]	1125
Dynamic load torque (My), maximum	[Nm]	Lc[1] × 0,56
Dynamic load torque (Mz), maximum	[Nm]	Lc[1] × 0,56
Force required to move second carriage	[N]	2
Ordering length (L order)	[mm]	Smax + Lc + 320
Total length (L tot]	[mm]	L order + 52
Weight of unit with zero stroke of carriages	[kg]	 7,06 2,40

[1] Value in mm

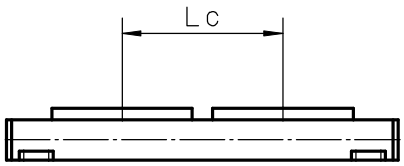

M75

Belt Drive, Ball Guide

» Ordering key - see page 198
» Accessories - see page 131
» Additional data - see page 179

General Specifications

Parameter	M75 / T75
Profile size (w × h) [mm]	86 × 75
Type of belt	STD5-40
Carriage sealing system	self-adjusting steel cover band
Adjustable belt tensioning	the belt can be retensioned by the customer if necessary
Lubrication	lubrication of ball guide carriages
Included accessories	none

Performance Specifications

for Units with Single Standard Carriage (A)[1]

Parameter		M75
Stroke length (Smax), maximum	[mm]	12000
Linear speed, maximum	[m/s]	5,0
Acceleration, maximum	[m/s²]	40
Repeatability	[± mm]	0,1
Input speed, maximum	[rpm]	2300
Operation temperature limits	[°C]	-20 – 70
Dynamic load (Fx), maximum	[N]	
< 2,5 m/s		900
> 2,5 m/s		450
Dynamic load (Fy), maximum	[N]	1750
Dynamic load (Fz), maximum	[N]	1750
Dynamic load torque (Mx), maximum	[Nm]	16
Dynamic load torque (My), maximum	[Nm]	84
Dynamic load torque (Mz), maximum	[Nm]	84
Drive shaft force (Frd), maximum	[N]	600
Drive shaft torque (Mta), maximum	[Nm]	30
Pulley diameter	[mm]	41,38
Stroke per shaft revolution	[mm]	130
Weight	[kg]	
of unit with zero stroke		7,50
of every 100 mm of stroke		0,88
of carriage		2,00

[1] See next page for deviating values of units with other carriage types.

Carriage Idle Torque (M idle) [Nm]

Input speed [rpm]	Single Carriage	Double Carriages
150	1,0	1,9

M idle = the input torque needed to move the carriage with no load on it.

Deflection of the Profile

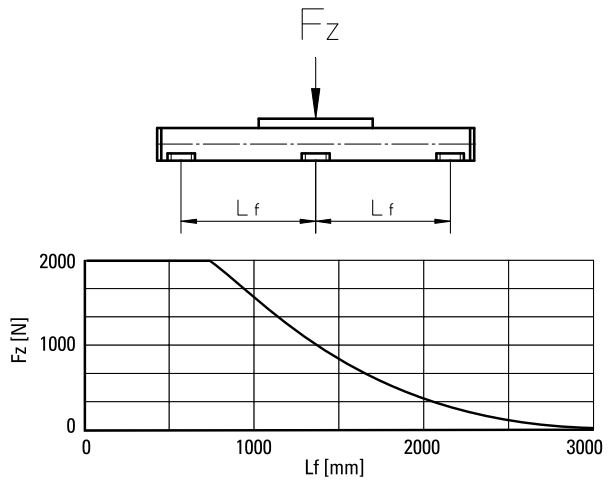

Definition of Forces

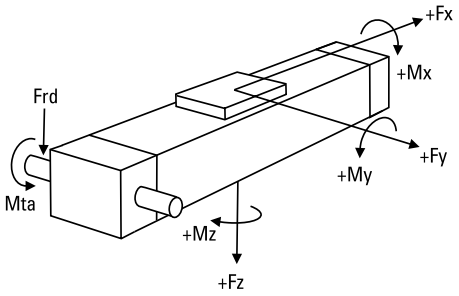

M75

Belt Drive, Ball Guide

Dimensions	Projection
METRIC	

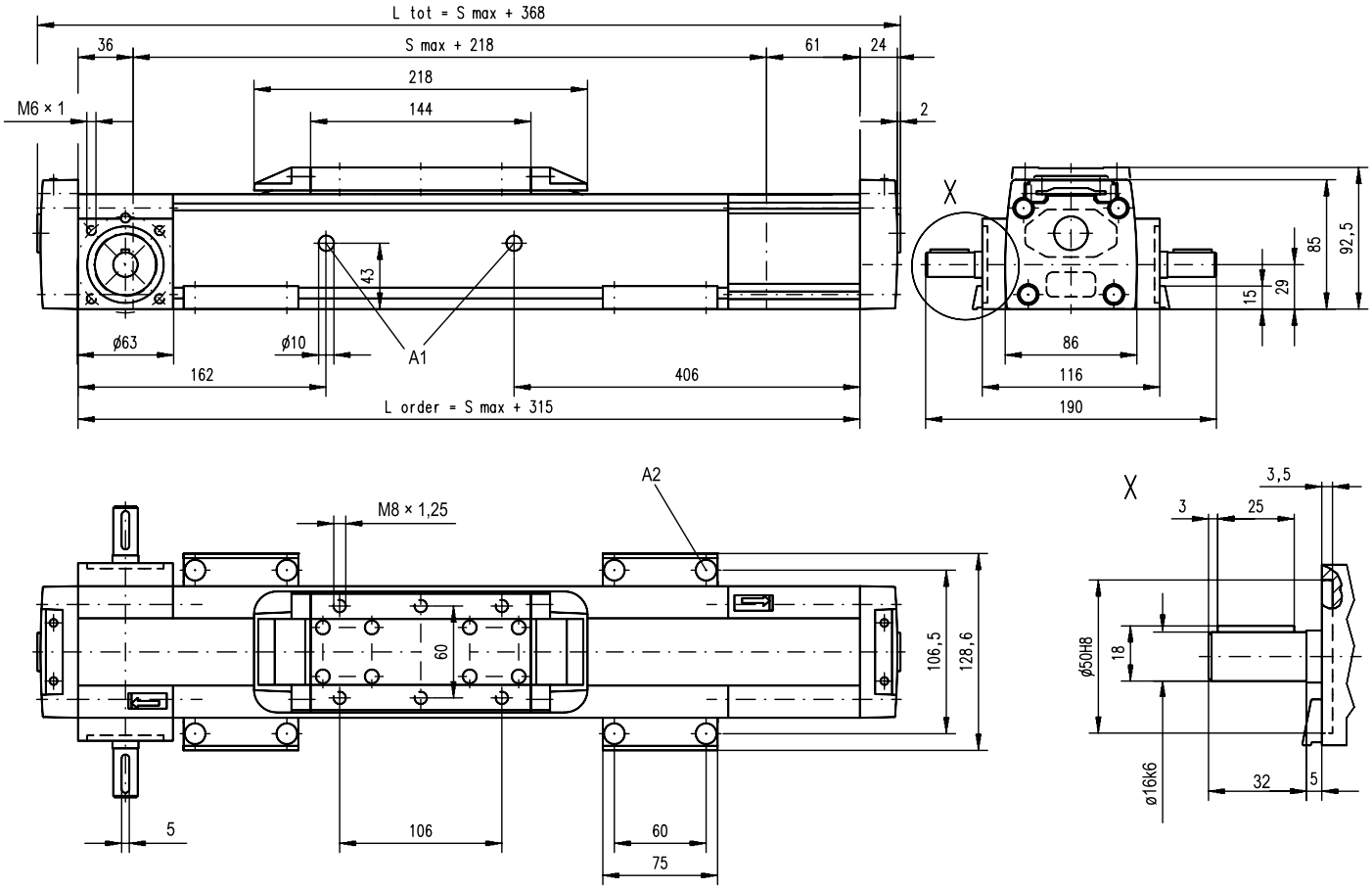

A1: lubrication holes
A2: ø13,5/ø8,5 for socket head cap screw M8

Performance Specifications

for Units with Double Standard Carriage (C)

Parameter		M75
Stroke length (Smax), maximum	[mm]	11750
Minimum distance between carriages (Lc)	[mm]	250
Dynamic load (Fy), maximum	[N]	2625
Dynamic load (Fz), maximum	[N]	2625
Dynamic load torque (My), maximum	[Nm]	Lc[1] × 1,313
Dynamic load torque (Mz), maximum	[Nm]	Lc[1] × 1,313
Force required to move second carriage	[N]	2
Ordering length (L order)	[mm]	Smax + Lc + 315
Total length (L tot]	[mm]	L order + 52
Weight of unit with zero stroke of carriages	[kg]	 11,67 4,00

[1] Value in mm

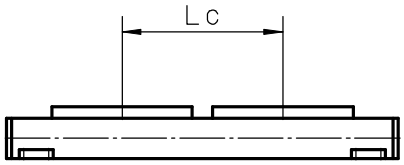

M100

Belt Drive, Ball Guide

» Ordering key - see page 198
» Accessories - see page 131
» Additional data - see page 179

General Specifications

Parameter	M100
Profile size (w × h) [mm]	108 × 100
Type of belt	STD8-50
Carriage sealing system	self-adjusting steel cover band
Adjustable belt tensioning	the belt can be retensioned by the customer if necessary
Lubrication	lubrication of ball guide carriages
Included accessories	none

Performance Specifications

for Units with Single Standard Carriage (A)[1]

Parameter		M100
Stroke length (Smax), maximum	[mm]	12000
Linear speed, maximum	[m/s]	5,0
Acceleration, maximum	[m/s²]	40
Repeatability	[± mm]	0,1
Input speed, maximum	[rpm]	1700
Operation temperature limits	[°C]	-20 – 70
Dynamic load (Fx), maximum	[N]	
< 2,5 m/s		1250
> 2,5 m/s		625
Dynamic load (Fy), maximum	[N]	4000
Dynamic load (Fz), maximum	[N]	4000
Dynamic load torque (Mx), maximum	[Nm]	43
Dynamic load torque (My), maximum	[Nm]	280
Dynamic load torque (Mz), maximum	[Nm]	280
Drive shaft force (Frd), maximum	[N]	1000
Drive shaft torque (Mta), maximum	[Nm]	45
Pulley diameter	[mm]	56,02
Stroke per shaft revolution	[mm]	176
Weight	[kg]	
of unit with zero stroke		11,61
of every 100 mm of stroke		1,43
of carriage		2,20

[1] See next page for deviating values of units with other carriage types.

Carriage Idle Torque (M idle) [Nm]

Input speed [rpm]	Single Carriage	Double Carriages
150	1,6	3,1

M idle = the input torque needed to move the carriage with no load on it.

Deflection of the Profile

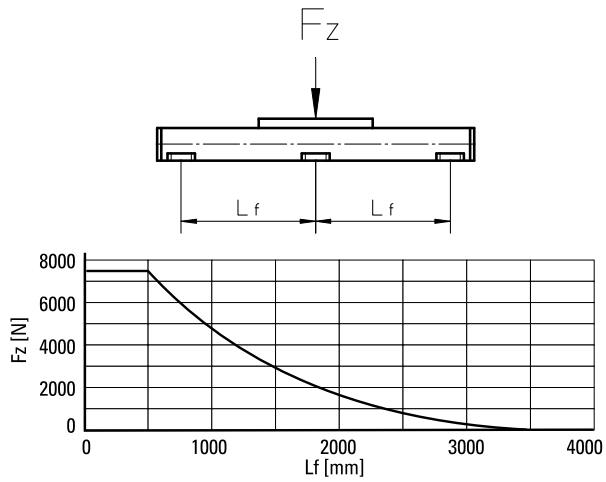

Definition of Forces

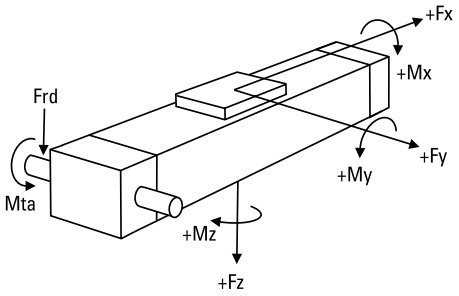

M100

Belt Drive, Ball Guide

Dimensions	Projection
METRIC	

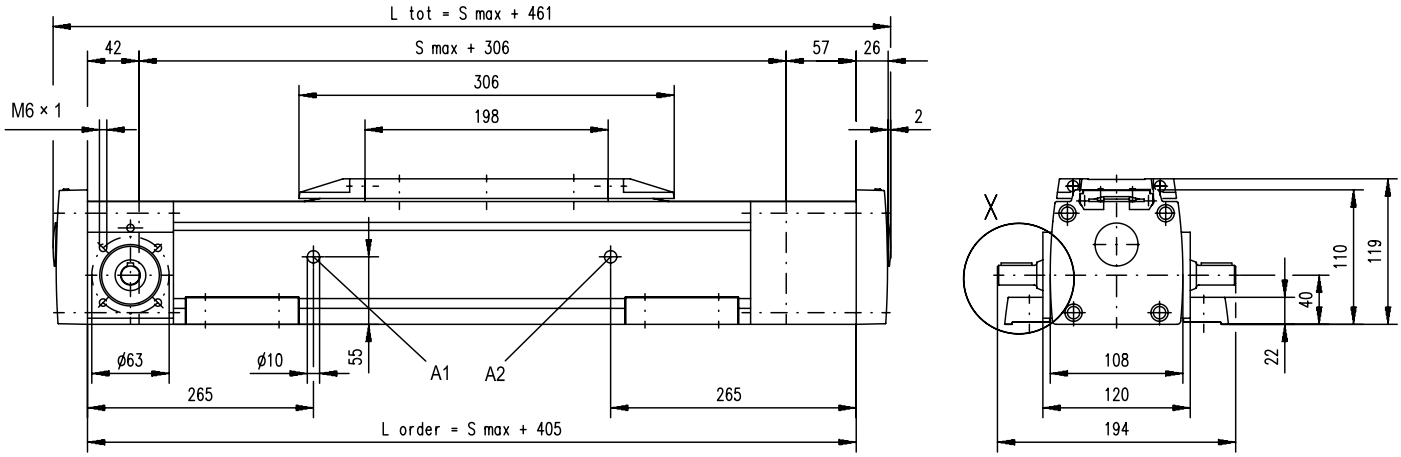

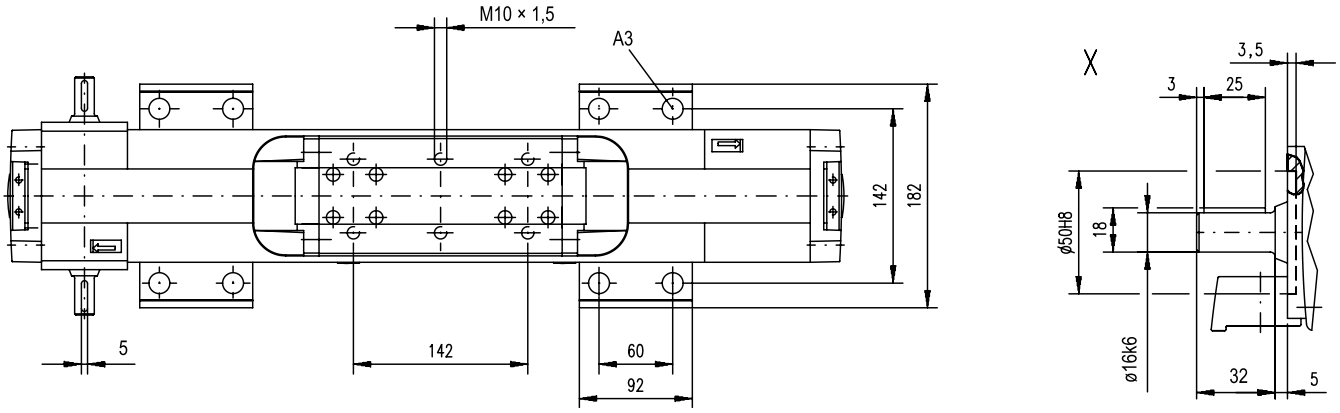

A1: lubrication hole
A2: lubrication hole (no hole if L order is < 856 mm)
A3: ø17/ø10,5 for socket head cap screw M10

Performance Specifications

for Units with Double Standard Carriage (C)

Parameter		M100
Stroke length (Smax), maximum	[mm]	11650
Minimum distance between carriages (Lc)	[mm]	350
Dynamic load (Fy), maximum	[N]	6000
Dynamic load (Fz), maximum	[N]	6000
Dynamic load torque (My), maximum	[Nm]	Lc[1] × 3
Dynamic load torque (Mz), maximum	[Nm]	Lc[1] × 3
Force required to move second carriage	[N]	2
Ordering length (L order)	[mm]	Smax + Lc + 405
Total length (L tot]	[mm]	L order + 56
Weight of unit with zero stroke of carriages	[kg]	 18,92 4,40

[1] Value in mm

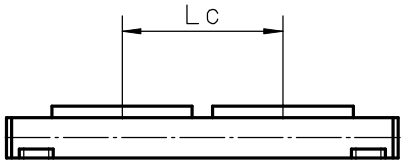

MLSM80Z

Belt Drive, Ball Guide

» Ordering key - see page 199
» Accessories - see page 131
» Additional data - see page 179

General Specifications

Parameter	MLSM80Z
Profile size (w × h) [mm]	240 × 85
Type of belt	75 ATL 10
Carriage sealing system	plastic cover band
Adjustable belt tensioning	the belt can be retensioned by the customer if necessary
Lubrication	central lubrication of all parts that require lubrication
Included accessories	4 × mounting clamps

Performance Specifications

for Units with Single Standard Carriage (N)[1]

Parameter		MLSM80Z
Stroke length (Smax), maximum	[mm]	5900
Total length (L tot), maximum	[mm]	6500
Linear speed, maximum	[m/s]	5,0
Acceleration, maximum	[m/s²]	20
Repeatability	[± mm]	0,05
Input speed, maximum	[rpm]	1500
Operation temperature limits	[°C]	0 – 80
Dynamic load (Fx), maximum	[N]	5000 [2]
Dynamic load (Fy), maximum	[N]	6400
Dynamic load (Fz), maximum	[N]	6400
Dynamic load torque (Mx), maximum	[Nm]	600
Dynamic load torque (My), maximum	[Nm]	720
Dynamic load torque (Mz), maximum	[Nm]	720
Drive shaft force (Frd), maximum	[N]	700
Drive shaft torque (Mta), maximum	[Nm]	150
Pulley diameter	[mm]	63,66
Stroke per shaft revolution	[mm]	200
Weight	[kg]	
of unit with zero stroke		30,8
of every 100 mm of stroke		2,2
of each carriage		9,6

[1] See next page for deviating values of units with other carriage types.
[2] See diagram Force Fx.

Carriage Idle Torque, (M idle) [Nm]

Input speed [rpm]	Idle torque [Nm]
150	8,5
750	12
1500	14,5

M idle = the input torque needed to move the carriage with no load on it.

Deflection of the Profile

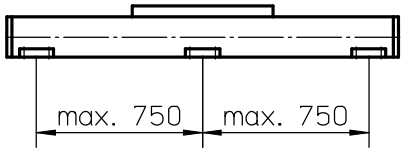

A mounting clamp must be installed at least every 750 mm to be able to operate at maximum load. Less clamps may be required if less load is being operated, see the additional technical data for more information.

Force Fx as a Function of the Speed

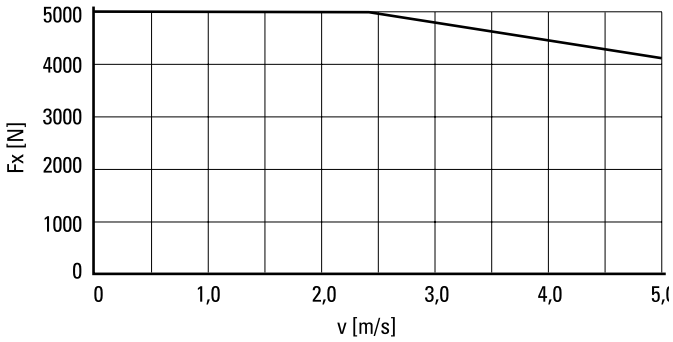

Definition of Forces

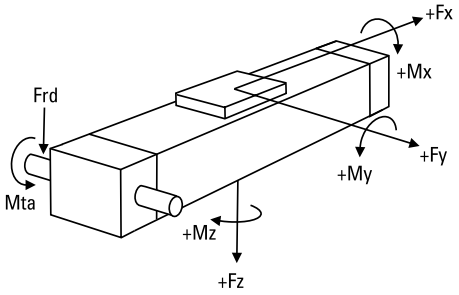

MLSM80Z

Belt Drive, Ball Guide

Dimensions	Projection
METRIC	

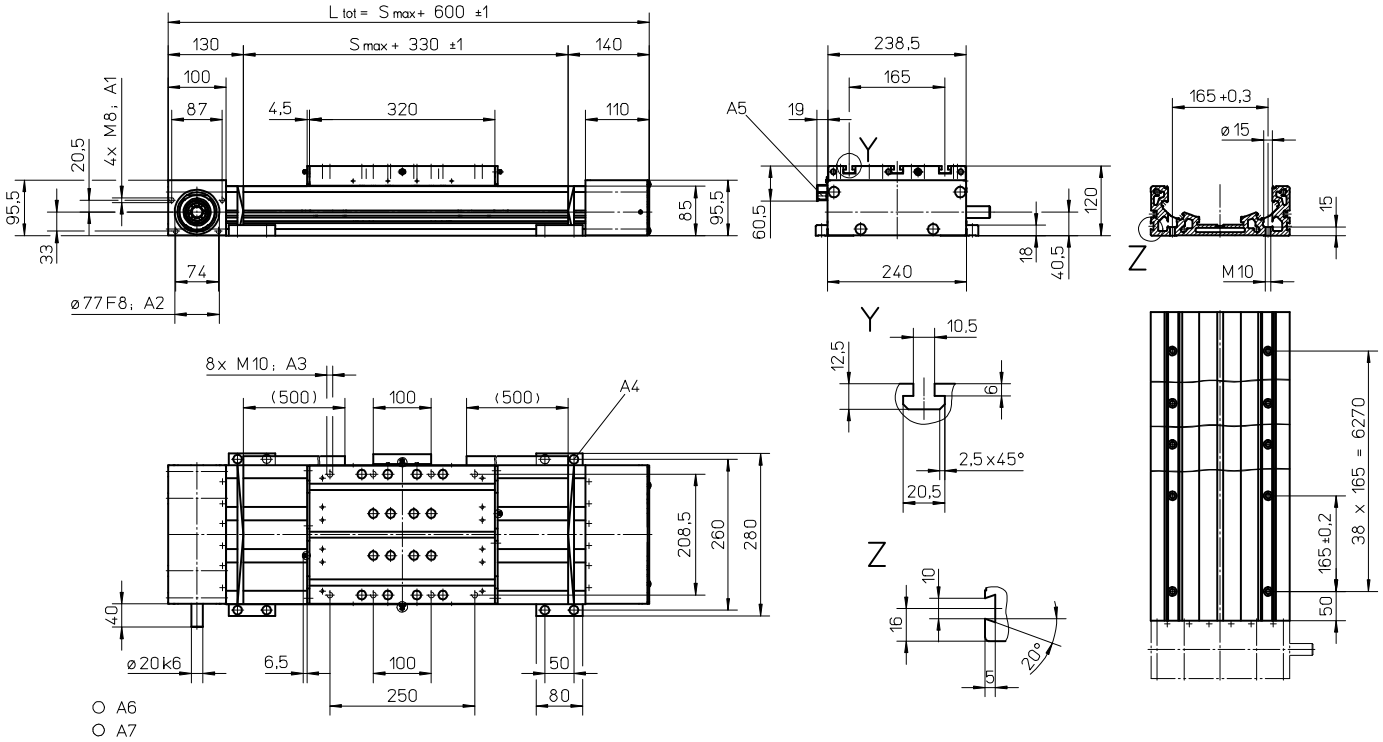

A1: depth 18
A2: depth 4
A3: depth 15
A4: socket cap screw ISO4762-M8×20 8.8
A5: ENF inductive sensor rail kit (optional - see page 172)
A6: tapered lubricating nipple to DIN71412 M8×1 on fixed-bearing side as standard feature
A7: can be changed over to one of the three alternative lubricating points by the customer

Performance Specifications
for Units with Single Long Carriage (L)

Parameter		MLSM80Z
Stroke length (Smax), maximum	[mm]	5900
Total length (L tot), maximum	[mm]	6680
Carriage length	[mm]	500
Dynamic load torque (My), maximum	[Nm]	1400
Dynamic load torque (Mz), maximum	[Nm]	1400
Weight	[kg]	14

Performance Specifications
for Units with Double Standard Carriage (Z)

Parameter		MLSM80Z
Stroke length (Smax), maximum	[mm]	5680
Total length (L tot), maximum	[mm]	6680
Minimum distance between carriages (L_A)	[mm]	400
Dynamic load (Fy), maximum	[N]	12800
Dynamic load (Fz), maximum	[N]	12800
Dynamic load torque (My), maximum	[Nm]	L_A[1] × 6,4
Dynamic load torque (Mz), maximum	[Nm]	L_A[1] × 6,4
Force required to move second carriage	[N]	35
Total length (L tot)	[mm]	Smax + 600 + L_A

[1] Value in mm

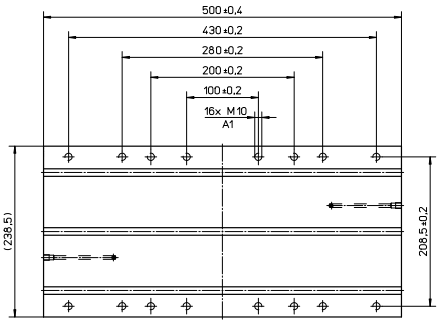

A1: depth 15

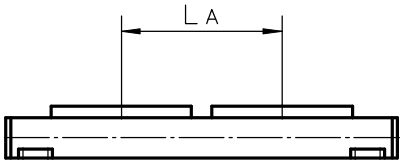

Linear Motion Systems with Belt Drive and Slide Guide

Overview

Movopart M

M50

Features
- Can be installed in any orientation
- Patented self-adjusting prism slide guides
- Resistant to shock loads and vibrations
- Low cost

Parameter		M50
Profile size (width × height)	[mm]	50 × 50
Stroke length (Smax), maximum	[mm]	5000
Linear speed, maximum	[m/s]	5,0
Dynamic carriage load (Fz), maximum	[N]	400
Remarks		no cover band
Page		96

Movopart M

M100

Features
- Can be installed in any orientation
- Self-adjusting stainless steel cover band
- Patented self-adjusting prism slide guides
- Wash down and enhanced wash down protected versions available

Parameter		M55	M75	M100
Profile size (width × height)	[mm]	58 × 55	86 × 75	108 × 100
Stroke length (Smax), maximum	[mm]	7000	12000	12000
Linear speed, maximum	[m/s]	5,0	5,0	5,0
Dynamic carriage load (Fz), maximum	[N]	400	1485	3005
Remarks		-	-	-
Page		98	100	102

Linear Motion Systems with Belt Drive and Slide Guide

Overview

M-Series Technical Presentation

Cover band
The self-adjusting magnetically sealed stainless steel cover band protects the unit from the penetration of dirt, dust and liquids.

Environmental protection
The standard unit can operate in harsh environments but is also available in wash down or enhanced wash down protected versions for the toughest environments.

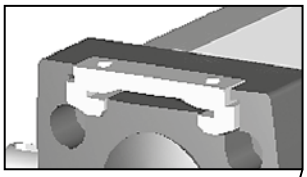

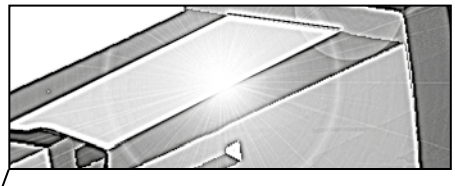

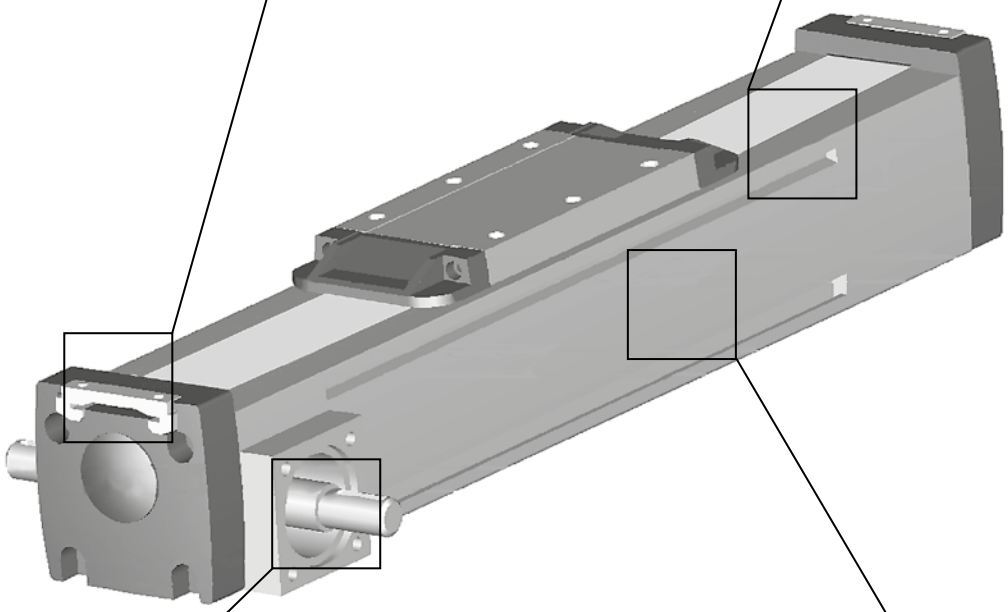

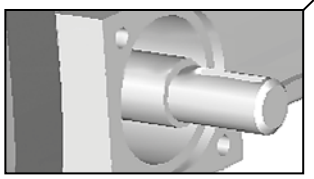

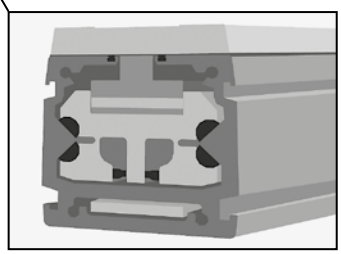

Belt drive
The belt runs on the inside of the profile and can easily be re-tensioned without removing the load from the carriage.

Prism slide guides
The patented self-aligning prism slide guides are accurate, durable and are resistant to vibrations and shock loads.

M50

Belt Drive, Slide Guide

» Ordering key - see page 200
» Accessories - see page 131
» Additional data - see page 180

General Specifications

Parameter	M50
Profile size (w × h) [mm]	50 × 50
Type of belt	GT 5MR-19
Carriage sealing system	none
Adjustable belt tensioning	the belt can be retensioned by the customer if necessary
Lubrication	lubricated for life
Included accessories	none

Performance Specifications

for Units with Single Standard Carriage (A00)

Parameter		M50
Stroke length (Smax), maximum	[mm]	5000
Linear speed, maximum	[m/s]	5,0
Acceleration, maximum	[m/s²]	40
Repeatability	[± mm]	0,2
Input speed, maximum	[rpm]	2300
Operation temperature limits	[°C]	-20 – 70
Dynamic load (Fx), maximum < 2,5 m/s > 2,5 m/s	[N]	 400 200
Dynamic load (Fy), maximum	[N]	400
Dynamic load (Fz), maximum	[N]	400
Dynamic load torque (Mx), maximum	[Nm]	5
Dynamic load torque (My), maximum	[Nm]	21
Dynamic load torque (Mz), maximum	[Nm]	21
Drive shaft force (Frd), maximum	[N]	350
Drive shaft torque (Mta), maximum	[Nm]	10
Pulley diameter	[mm]	41,38
Stroke per shaft revolution	[mm]	130
Weight of unit with zero stroke of every 100 mm of stroke of carriage	[kg]	 0,71 0,96 0,33

Carriage Idle Torque (M idle) [Nm]

Input speed [rpm]	Idle torque [Nm]
150	2,1

M idle = the input torque needed to move the carriage with no load on it.

Deflection of the Profile

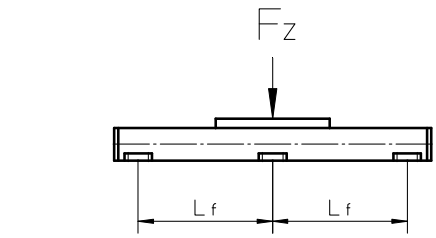

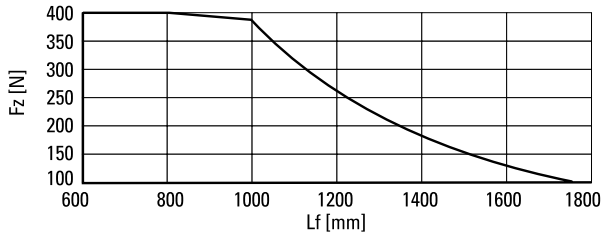

Definition of Forces

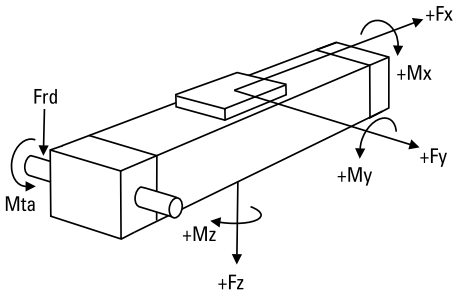

M50

Belt Drive, Slide Guide

Dimensions	Projection
METRIC	

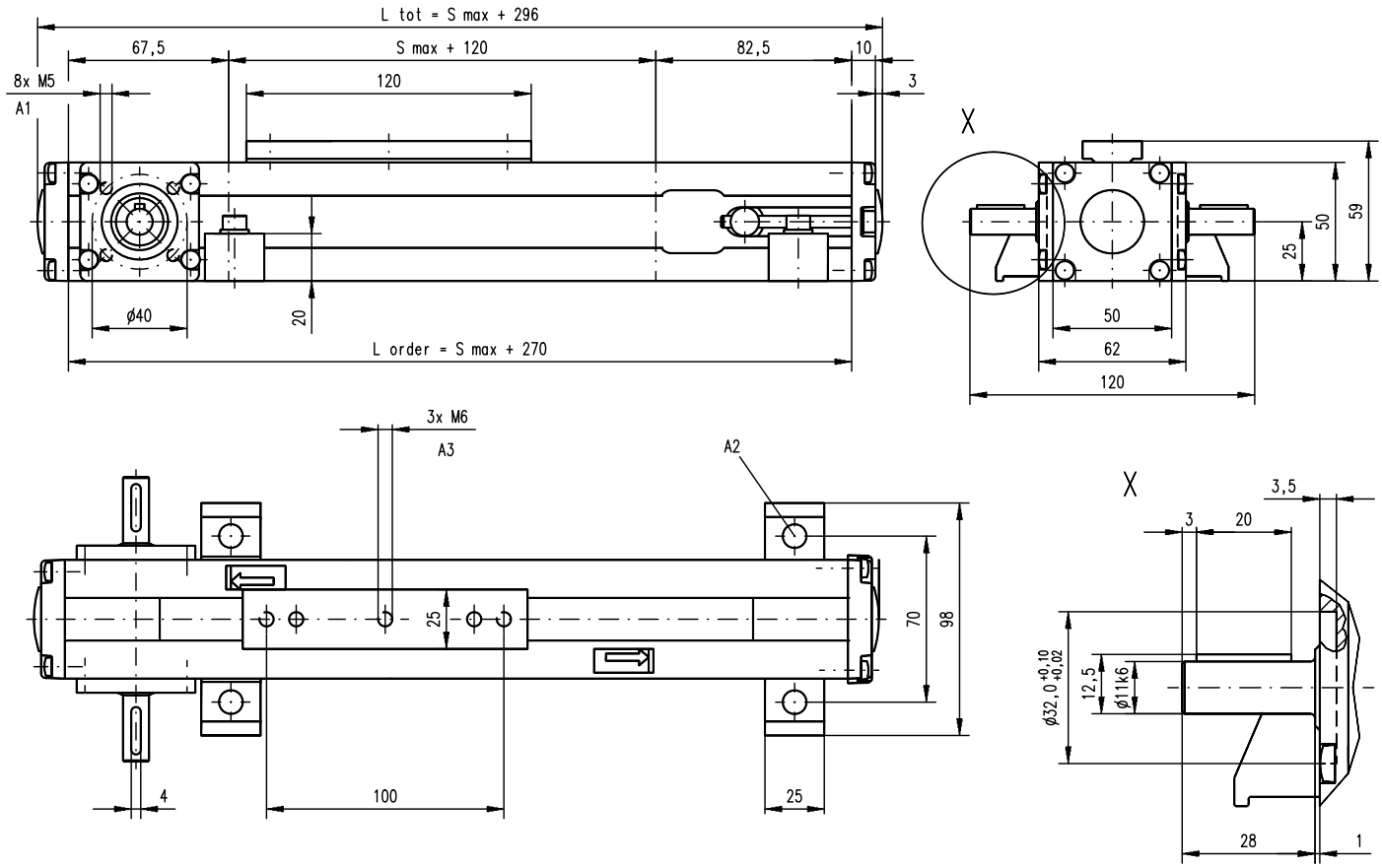

A1: depth 8,5
A2: ø6,5 for M6 screw
A3: depth 9, Heli coil

M55

Belt Drive, Slide Guide

» Ordering key - see page 200
» Accessories - see page 131
» Additional data - see page 180

General Specifications

Parameter	M55
Profile size (w × h) [mm]	58 × 50
Type of belt	22-STD SM5-HP
Carriage sealing system	self-adjusting steel cover band
Adjustable belt tensioning	the belt can be retensioned by the customer if necessary
Lubrication	lubricated for life
Included accessories	none

Performance Specifications

for Units with Single Standard Carriage (A)[1]

Parameter		M55
Stroke length (Smax), maximum	[mm]	7000
Linear speed, maximum	[m/s]	5,0
Acceleration, maximum	[m/s²]	40
Repeatability	[± mm]	0,2
Input speed, maximum	[rpm]	2850
Operation temperature limits	[°C]	-20 – 70
Dynamic load (Fx), maximum < 2,5 m/s > 2,5 m/s	[N]	 400 200
Dynamic load (Fy), maximum	[N]	400
Dynamic load (Fz), maximum	[N]	400
Dynamic load torque (Mx), maximum	[Nm]	9
Dynamic load torque (My), maximum	[Nm]	21
Dynamic load torque (Mz), maximum	[Nm]	21
Drive shaft force (Frd), maximum	[N]	200
Drive shaft torque (Mta), maximum	[Nm]	7
Pulley diameter	[mm]	33,42
Stroke per shaft revolution	[mm]	105
Weight of unit with zero stroke of every 100 mm of stroke of carriage	[kg]	 4,10 0,41 1,10

[1] See next page for deviating values of units with other carriage types.

Carriage Idle Torque (M idle) [Nm]

Input speed [rpm]	Single Carriage	Double Carriages
150	2,1	3,8

M idle = the input torque needed to move the carriage with no load on it.

Deflection of the Profile

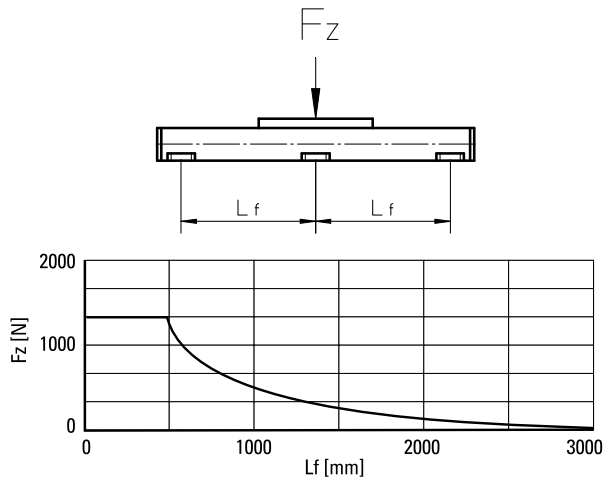

Definition of Forces

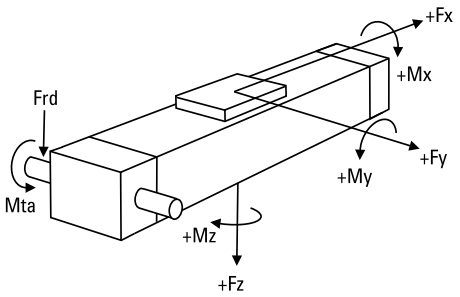

M55

Belt Drive, Slide Guide

Dimensions	Projection
METRIC	

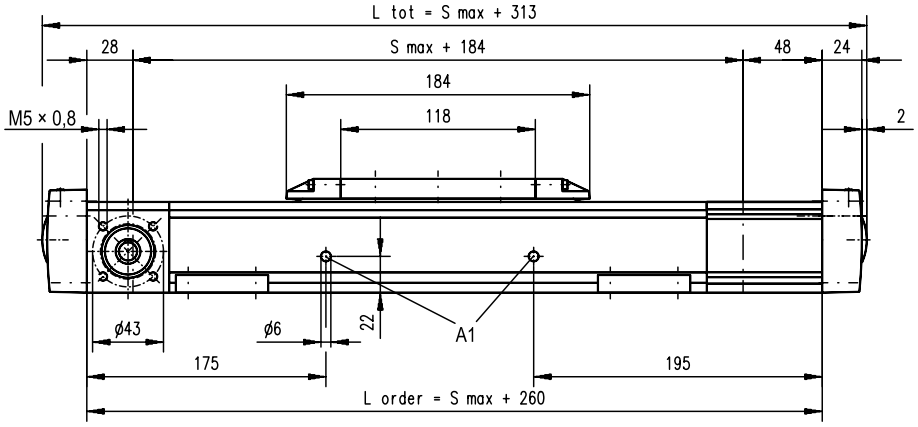

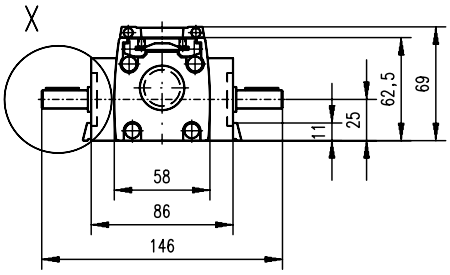

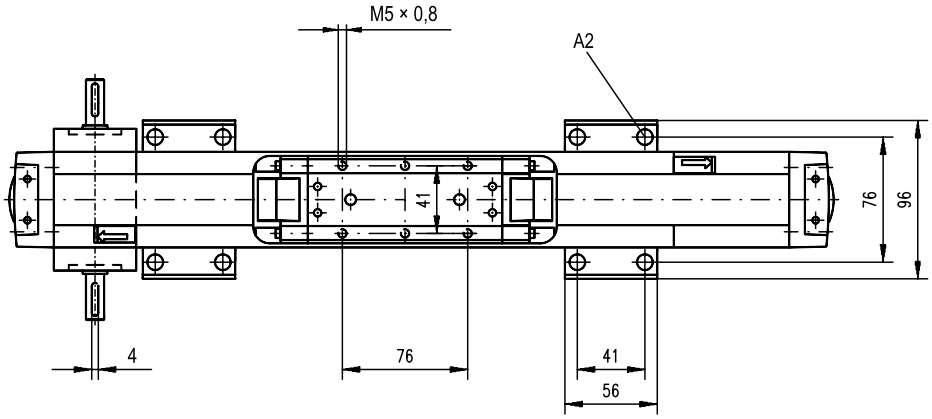

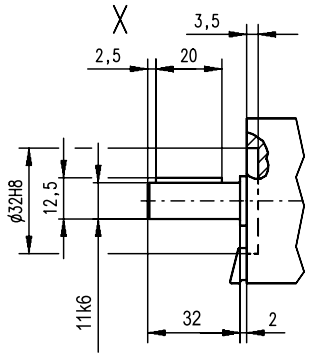

A1: lubrication holes
A2: ø9,5/ø5,5 for socket head cap screw M5

Performance Specifications

for Units with Double Standard Carriage (C)

Parameter		M55
Stroke length (Smax), maximum	[mm]	6800
Minimum distance between carriages (Lc)	[mm]	200
Dynamic load (Fy), maximum	[N]	600
Dynamic load (Fz), maximum	[N]	600
Dynamic load torque (My), maximum	[Nm]	Lc[1] × 0,3
Dynamic load torque (Mz), maximum	[Nm]	Lc[1] × 0,3
Force required to move second carriage	[N]	35
Ordering length (L order)	[mm]	Smax + Lc + 260
Total length (L tot]	[mm]	L order + 53
Weight of unit with zero stroke of carriages	[kg]	 6,00 2,20

[1] Value in mm

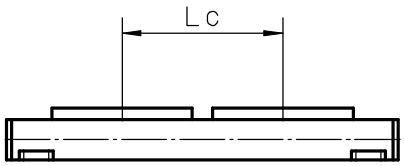

M75

Belt Drive, Slide Guide

» Ordering key - see page 200
» Accessories - see page 131
» Additional data - see page 180

General Specifications

Parameter	M75
Profile size (w × h) [mm]	86 × 75
Type of belt	STD5-40
Carriage sealing system	self-adjusting steel cover band
Adjustable belt tensioning	the belt can be retensioned by the customer if necessary
Lubrication	lubricated for life
Included accessories	none

Performance Specifications

for Units with Single Standard Carriage (A)[1]

Parameter		M75
Stroke length (Smax), maximum	[mm]	12000
Linear speed, maximum	[m/s]	5,0
Acceleration, maximum	[m/s²]	40
Repeatability	[± mm]	0,2
Input speed, maximum	[rpm]	2300
Operation temperature limits	[°C]	-20 – 70
Dynamic load (Fx), maximum < 2,5 m/s > 2,5 m/s	[N]	 900 450
Dynamic load (Fy), maximum	[N]	1485
Dynamic load (Fz), maximum	[N]	1485
Dynamic load torque (Mx), maximum	[Nm]	49
Dynamic load torque (My), maximum	[Nm]	85
Dynamic load torque (Mz), maximum	[Nm]	85
Drive shaft force (Frd), maximum	[N]	600
Drive shaft torque (Mta), maximum	[Nm]	30
Pulley diameter	[mm]	41,38
Stroke per shaft revolution	[mm]	130
Weight of unit with zero stroke of every 100 mm of stroke of carriage	[kg]	 6,30 0,67 1,50

[1] See next page for deviating values of units with other carriage types.

Carriage Idle Torque (M idle) [Nm]

Input speed [rpm]	Single Carriage	Double Carriages
150	2,2	4,0

M idle = the input torque needed to move the carriage with no load on it.

Deflection of the Profile

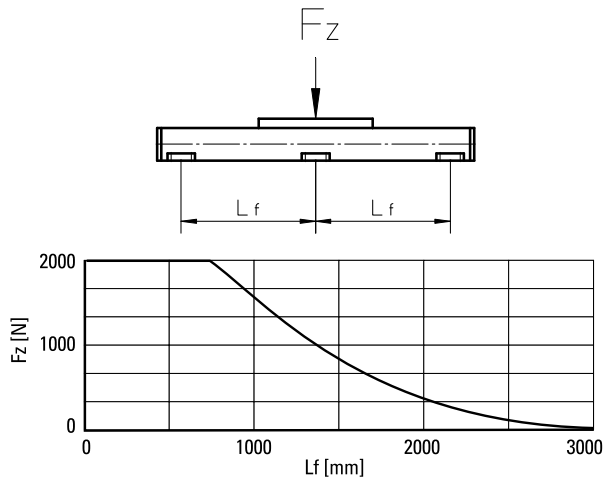

Definition of Forces

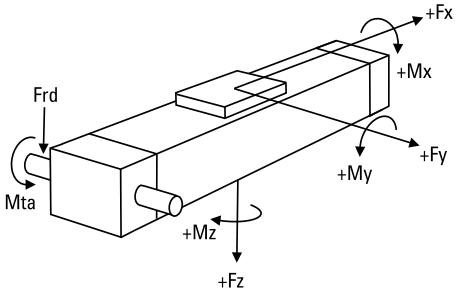

M75

Belt Drive, Slide Guide

Dimensions	Projection
METRIC	

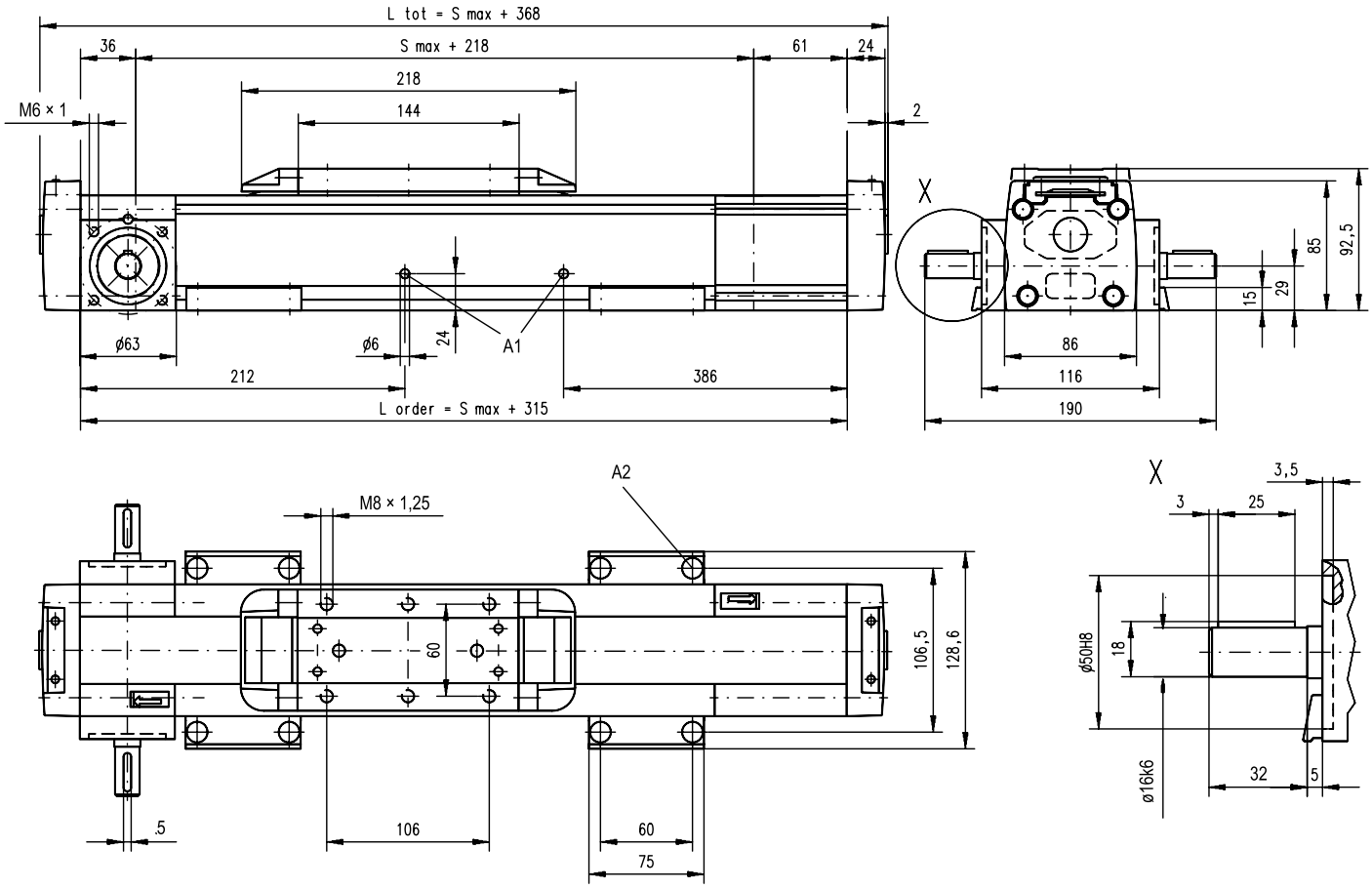

A1: lubrication holes
A2: ø13,5/ø8,5 for socket head cap screw M8

Performance Specifications

for Units with Double Standard Carriage (C)

Parameter		M75
Stroke length (Smax), maximum	[mm]	11750
Minimum distance between carriages (Lc)	[mm]	250
Dynamic load (Fy), maximum	[N]	2227
Dynamic load (Fz), maximum	[N]	2227
Dynamic load torque (My), maximum	[Nm]	Lc[1] × 1,114
Dynamic load torque (Mz), maximum	[Nm]	Lc[1] × 1,114
Force required to move second carriage	[N]	40
Ordering length (L order)	[mm]	Smax + Lc + 315
Total length (L tot]	[mm]	L order + 53
Weight of unit with zero stroke of carriages	[kg]	 9,50 3,00

[1] Value in mm

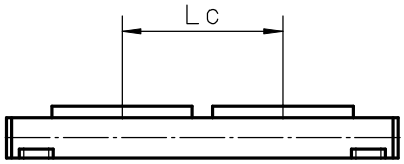

M100

Belt Drive, Slide Guide

» Ordering key - see page 200
» Accessories - see page 131
» Additional data - see page 180

General Specifications

Parameter	M100
Profile size (w × h) [mm]	108 × 100
Type of belt	STD8-50
Carriage sealing system	self-adjusting steel cover band
Adjustable belt tensioning	the belt can be retensioned by the customer if necessary
Lubrication	lubricated for life
Included accessories	none

Performance Specifications

for Units with Single Standard Carriage (A)[1]

Parameter		M100
Stroke length (Smax), maximum	[mm]	12000
Linear speed, maximum	[m/s]	5,0
Acceleration, maximum	[m/s²]	40
Repeatability	[± mm]	0,2
Input speed, maximum	[rpm]	1700
Operation temperature limits	[°C]	-20 – 70
Dynamic load (Fx), maximum	[N]	
< 2,5 m/s		1250
> 2,5 m/s		625
Dynamic load (Fy), maximum	[N]	3005
Dynamic load (Fz), maximum	[N]	3005
Dynamic load torque (Mx), maximum	[Nm]	117
Dynamic load torque (My), maximum	[Nm]	279
Dynamic load torque (Mz), maximum	[Nm]	279
Drive shaft force (Frd), maximum	[N]	1000
Drive shaft torque (Mta), maximum	[Nm]	45
Pulley diameter	[mm]	56,02
Stroke per shaft revolution	[mm]	176
Weight	[kg]	
of unit with zero stroke		11,10
of every 100 mm of stroke		1,16
of carriage		2,40

[1] See next page for deviating values of units with other carriage types.

Carriage Idle Torque (M idle) [Nm]

Input speed [rpm]	Single Carriage	Double Carriages
150	3,8	5,8

M idle = the input torque needed to move the carriage with no load on it.

Deflection of the Profile

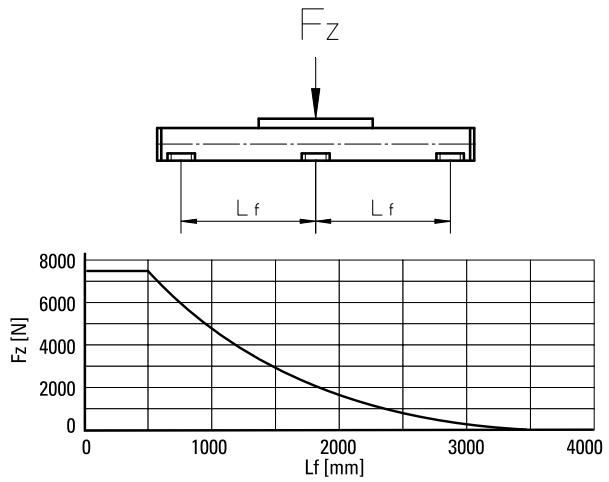

Definition of Forces

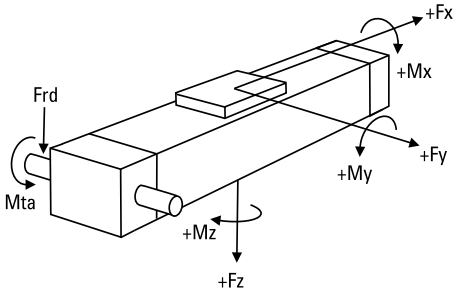

M100

Belt Drive, Slide Guide

Dimensions	Projection
METRIC	

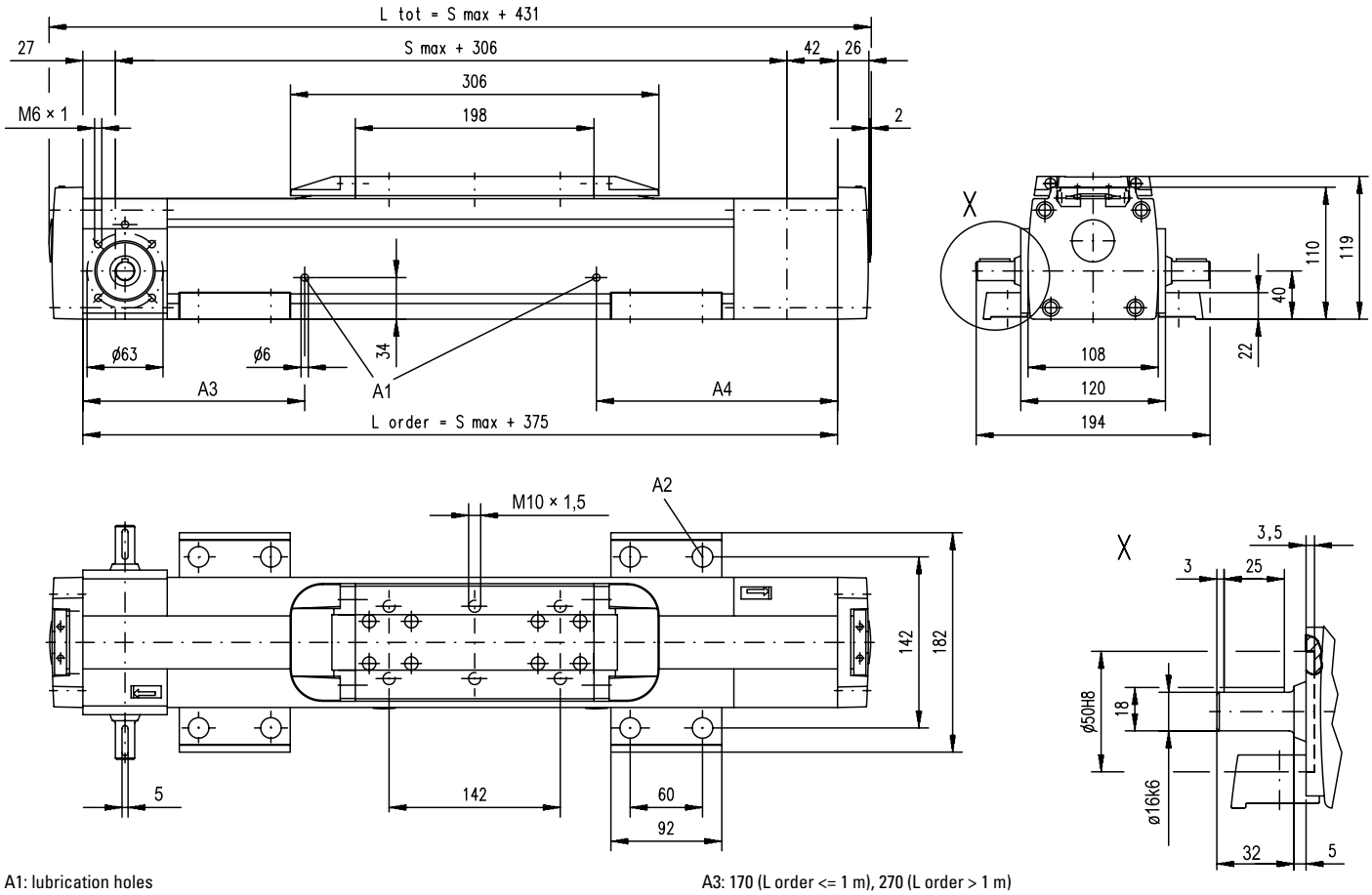

A1: lubrication holes
A2: ø17/ø10,5 for socket head cap screw M10

A3: 170 (L order <= 1 m), 270 (L order > 1 m)
A4: 186 (L order < = 1 m), 436 (L order > 1 m)

Performance Specifications

for Units with Double Standard Carriage (C)

Parameter		M100
Stroke length (Smax), maximum	[mm]	11650
Minimum distance between carriages (Lc)	[mm]	350
Dynamic load (Fy), maximum	[N]	4508
Dynamic load (Fz), maximum	[N]	4508
Dynamic load torque (My), maximum	[Nm]	Lc[1] × 2,254
Dynamic load torque (Mz), maximum	[Nm]	Lc[1] × 2,254
Force required to move second carriage	[N]	45
Ordering length (L order)	[mm]	Smax + Lc + 375
Total length (L tot]	[mm]	L order + 56
Weight of unit with zero stroke of carriages	[kg]	 17,40 4,80

[1] Value in mm

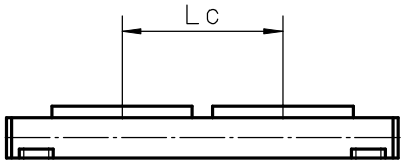

Linear Units with Belt Drive and Wheel Guide

Overview

SpeedLine WH

WH80

Features

- Can be installed in any orientation
- Speed up to 11 m/s and stroke up to 11 m
- Acceleration up to 40 m/s²
- Felt pad wipers cleaning the guides as standard

Parameter		WH50	WH80	WH120
Profile size (width × height)	[mm]	50 × 50	80 × 80	120 × 110
Stroke length (Smax), maximum	[mm]	3000	11000	11000
Linear speed, maximum	[m/s]	6,5	10,0	10,0
Dynamic carriage load (Fz), maximum	[N]	730	2100	9300
Remarks		external wheel guides no cover band	external wheel guides no cover band	external wheel guides no cover band
Page		106	108	110

WH-Series Technical Presentation

Belt tensioning
The belt can easily be replaced or re-tensioned from the outside of the unit without the load being removed from the carriage.

Belt drive
The steel reinforced belt is wear resistant, highly efficient and very accurate even at high speeds and loads.

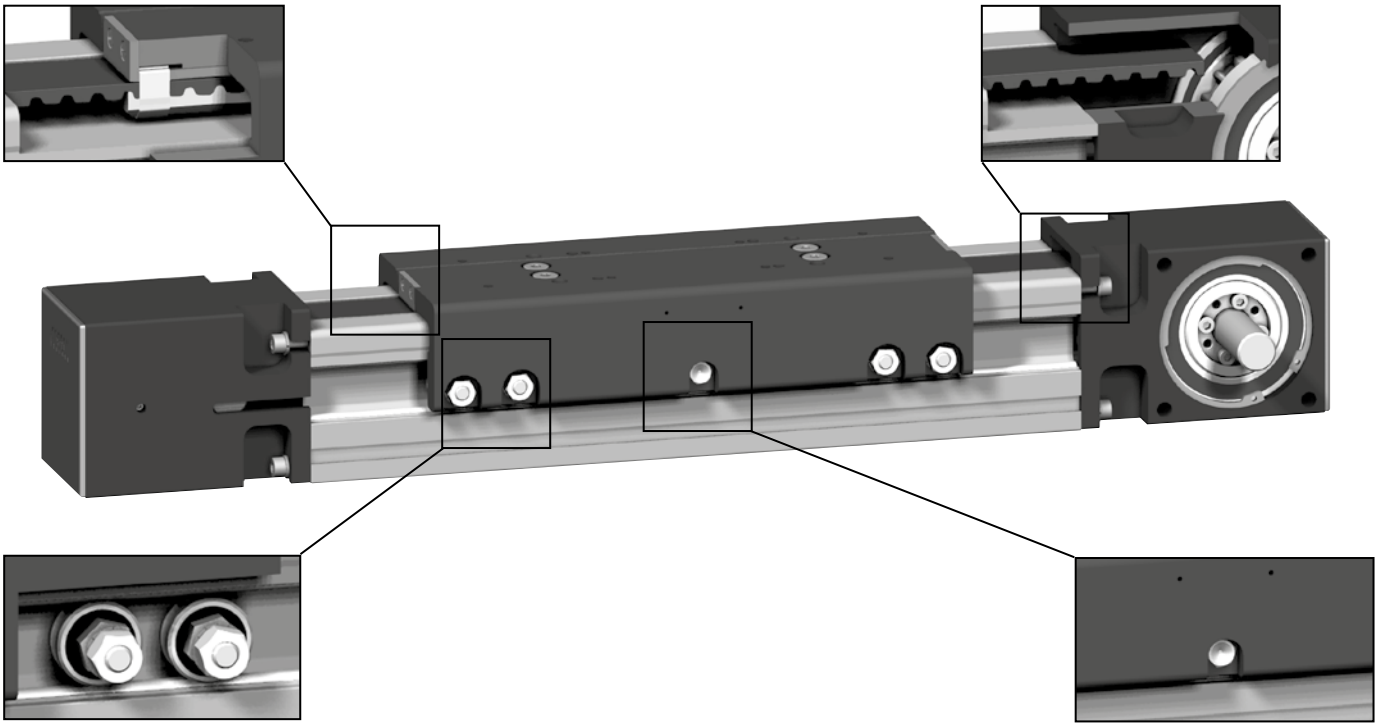

Wheel guides
The H-type arrangement of the guides allows fast moves and high forces and moments.

Central lubrication
The guides are lubricated from a central point that is easy and fast to access.

Linear Units with Belt Drive and Wheel Guide

Overview

ForceLine **MLSH**

MLSH60Z

Features
- Can be installed in any orientation
- Patented plastic cover band
- Speed up to 10 m/s
- Low profile height

Parameter		MLSH60Z
Profile size (width × height)	[mm]	160 × 65
Stroke length (Smax), maximum	[mm]	5500
Linear speed, maximum	[m/s]	10,0
Dynamic carriage load (Fz), maximum	[N]	3000
Remarks		internal wheel guides
Page		112

MLSH-Series Technical Presentation

Belt tensioning
The belt can easily be re-tensioned from the outside of the unit without the load being removed from the carriage.

Belt drive
The highly dynamic and accurate belt is protected by the cover band ensuring long and trouble free operation.

Cover band
The patented cover band protect the interior of the unit from the penetration of dirt, dust and liquids.

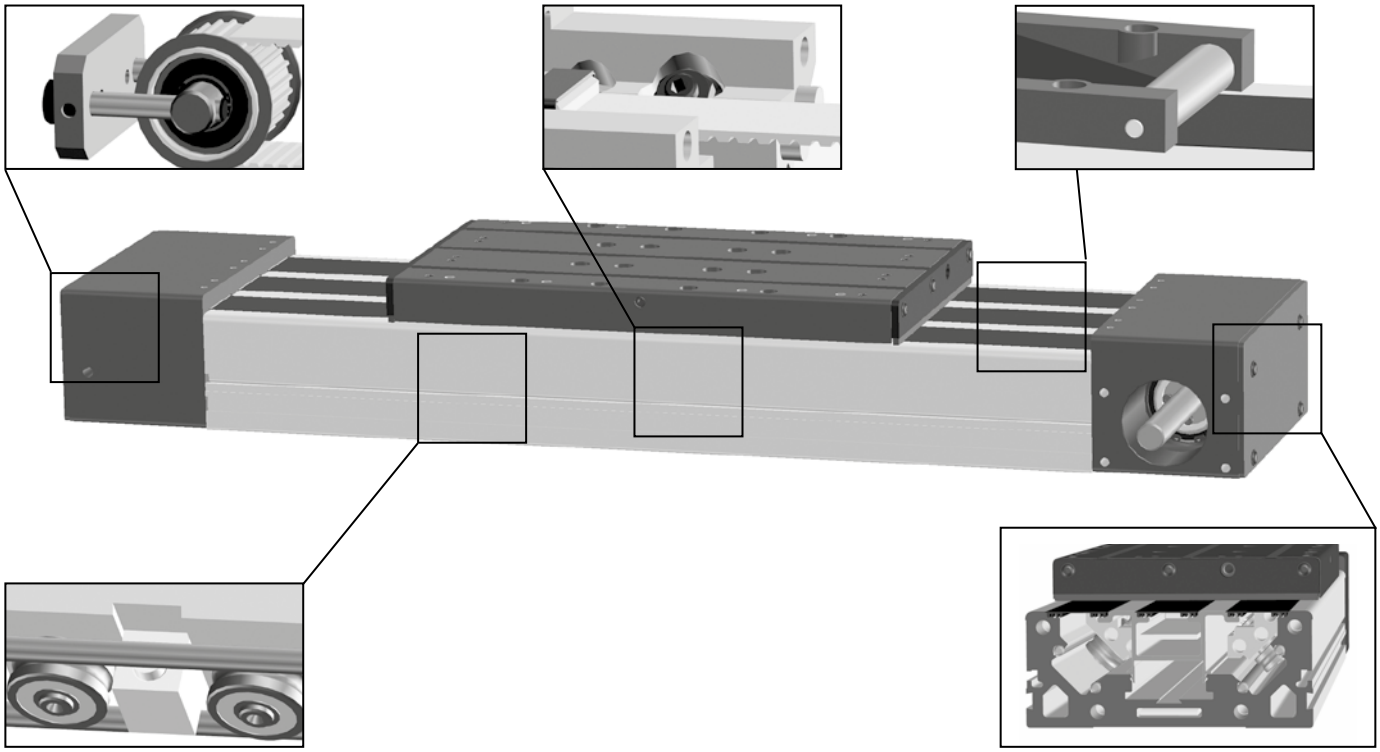

Wheel guides
The robust wheel guides runs inside of the profile providing superior motion dynamics.

Unique profile
The unique design of the profile guarantees the highest performance and protection of the guides and belt.

WH50

Belt Drive, Wheel Guide

» Ordering key - see page 201
» Accessories - see page 131
» Additional data - see page 180

General Specifications

Parameter	WH50
Profile size (w × h) [mm]	50 × 50
Type of belt	16ATL5
Carriage sealing system	none
Adjustable belt tensioning	the belt can be retensioned by the customer if necessary
Lubrication	lubrication og guiding surfaces
Included accessories	4 × mounting clamps

Performance Specifications

for Units with Single Standard Carriage (N)[1]

Parameter		WH50
Stroke length (Smax), maximum	[mm]	3000
Total length (L tot), maximum	[mm]	3440
Linear speed, maximum	[m/s]	6,5
Acceleration, maximum	[m/s²]	40
Repeatability	[± mm]	0,05
Input speed, maximum	[rpm]	3250
Operation temperature limits	[°C]	0 – 80
Dynamic load (Fx), maximum	[N]	670 [2]
Dynamic load (Fy), maximum	[N]	415
Dynamic load (Fz), maximum	[N]	730
Dynamic load torque (Mx), maximum	[Nm]	16
Dynamic load torque (My), maximum	[Nm]	87
Dynamic load torque (Mz), maximum	[Nm]	50
Drive shaft force (Frd), maximum	[N]	150
Drive shaft torque (Mta), maximum	[Nm]	17
Pulley diameter	[mm]	38,2
Stroke per shaft revolution	[mm]	120
Weight	[kg]	
of unit with zero stroke		3,50
of every 100 mm of stroke		0,44
of each carriage		0,90

[1] See next page for deviating values of units with other carriage types.
[2] See diagram Force Fx.

Carriage Idle Torque, (M idle) [Nm]

Input speed [rpm]	Idle torque [Nm]
150	1,7
1500	2,4
3250	3,8

M idle = the input torque needed to move the carriage with no load on it.

Deflection of the Profile

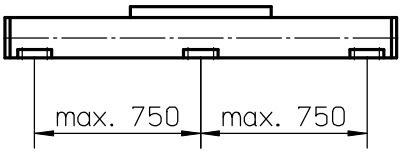

A mounting clamp must be installed at least every 750 mm to be able to operate at maximum load. Less clamps may be required if less load is being operated, see the additional technical data for more information.

Force Fx as a Function of the Speed

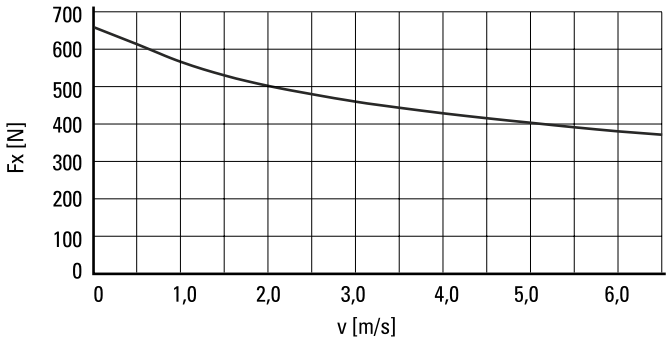

Definition of Forces

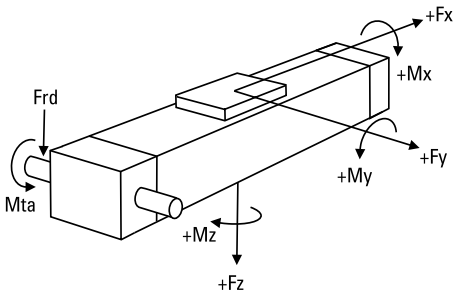

WH50

Belt Drive, Wheel Guide

Dimensions	Projection
METRIC	

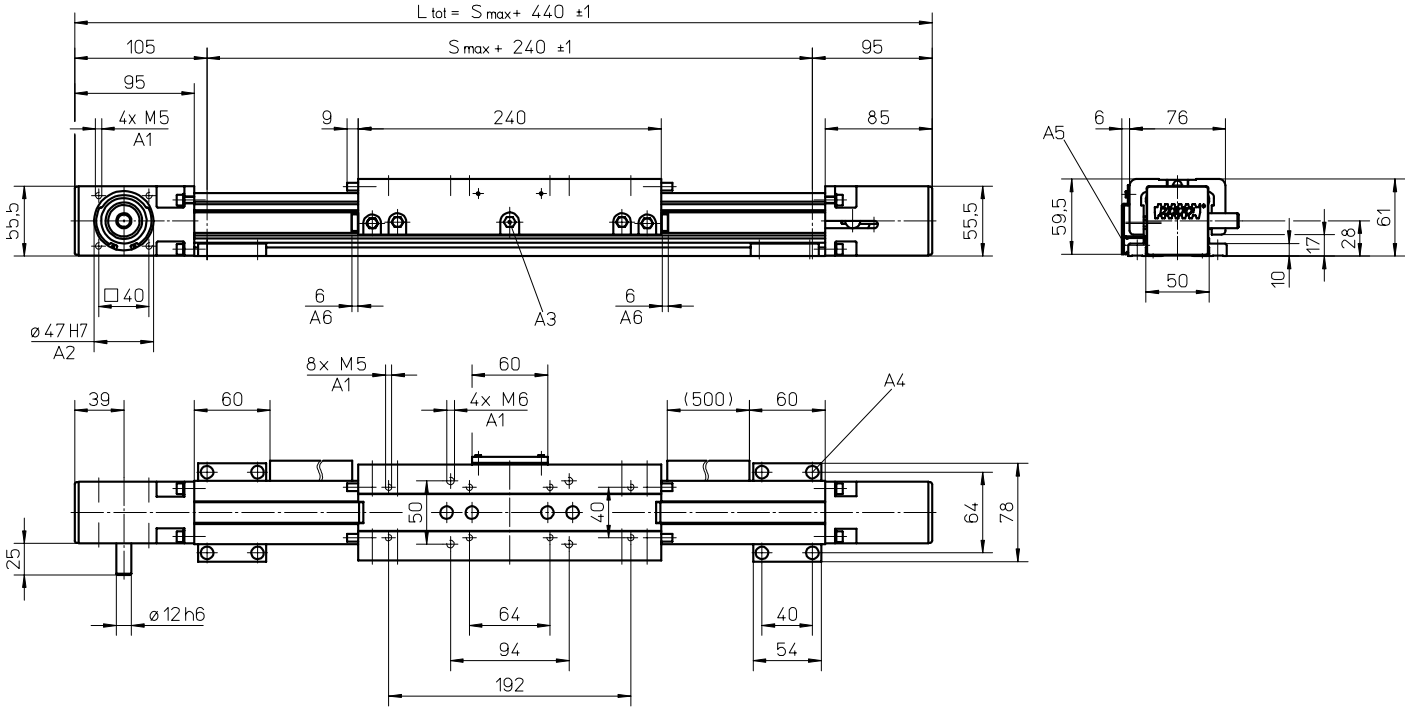

A1: depth 10
A2: depth 3
A3: funnel type lubricating nipple DIN3405-M6×1-D1
A4: socket cap screw ISO4762-M5×12 8.8
A5: ENF inductive sensor rail kit (optional - see page 172)
A6: felt pad wipers on both sides of the carriage

Performance Specifications
for Units with Single Long Carriage (L)

Parameter		WH50
Stroke length (Smax), maximum	[mm]	3000
Total length (L tot), maximum	[mm]	3600
Carriage length	[mm]	400
Dynamic load torque (My), maximum	[Nm]	130
Dynamic load torque (Mz), maximum	[Nm]	75
Weight	[kg]	1,47

Performance Specifications
for Units with Double Standard Carriage (Z)

Parameter		WH50
Stroke length (Smax), maximum	[mm]	2900
Total length (L tot), maximum	[mm]	3440
Minimum distance between carriages (L_A)	[mm]	260
Dynamic load (Fy), maximum	[N]	830
Dynamic load (Fz), maximum	[N]	1460
Dynamic load torque (My), maximum	[Nm]	L_A[1] × 0,415
Dynamic load torque (Mz), maximum	[Nm]	L_A[1] × 0,73
Force required to move second carriage	[N]	16
Total length (L tot)	[mm]	Smax + 440 + L_A

[1] Value in mm

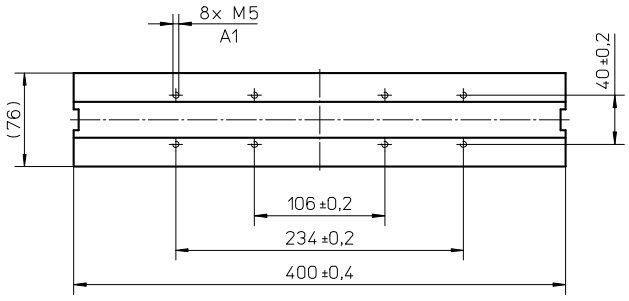

A1: depth 10

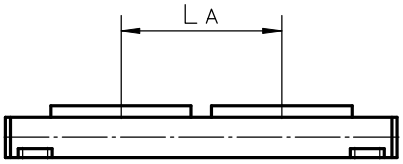

WH80

Belt Drive, Wheel Guide

» Ordering key - see page 201
» Accessories - see page 131
» Additional data - see page 180

General Specifications

Parameter	WH80
Profile size (w × h) [mm]	80 × 80
Type of belt	32ATL10
Carriage sealing system	none
Adjustable belt tensioning	the belt can be retensioned by the customer if necessary
Lubrication	lubrication of guiding surfaces
Included accessories	4 × mounting clamps

Performance Specifications

for Units with Single Standard Carriage (N)[1]

Parameter		WH80
Stroke length (Smax), maximum	[mm]	11000
Total length (L tot), maximum	[mm]	11550
Linear speed, maximum	[m/s]	10,0
Acceleration, maximum	[m/s²]	40
Repeatability	[± mm]	0,05
Input speed, maximum	[rpm]	3000
Operation temperature limits	[°C]	0 – 80
Dynamic load (Fx), maximum	[N]	2700 [2]
Dynamic load (Fy), maximum	[N]	882
Dynamic load (Fz), maximum	[N]	2100
Dynamic load torque (Mx), maximum	[Nm]	75
Dynamic load torque (My), maximum	[Nm]	230
Dynamic load torque (Mz), maximum	[Nm]	100
Drive shaft force (Frd), maximum	[N]	500
Drive shaft torque (Mta), maximum	[Nm]	100
Pulley diameter	[mm]	63,66
Stroke per shaft revolution	[mm]	200
Weight	[kg]	
of unit with zero stroke		8,63
of every 100 mm of stroke		0,93
of each carriage		2,75

[1] See next page for deviating values of units with other carriage types.
[2] See diagram Force Fx.

Carriage Idle Torque, (M idle) [Nm]

Input speed [rpm]	Idle torque [Nm]
150	2,4
1500	3,5
3000	5,0

M idle = the input torque needed to move the carriage with no load on it.

Deflection of the Profile

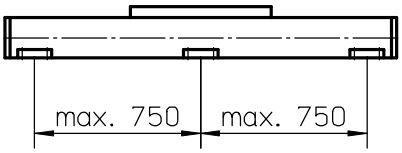

A mounting clamp must be installed at least every 750 mm to be able to operate at maximum load. Less clamps may be required if less load is being operated, see the additional technical data for more information. Units with a profile length over 6300 mm consist of two profiles where the joint between the two profiles must be adequately supported on both sides.

Force Fx as a Function of the Speed

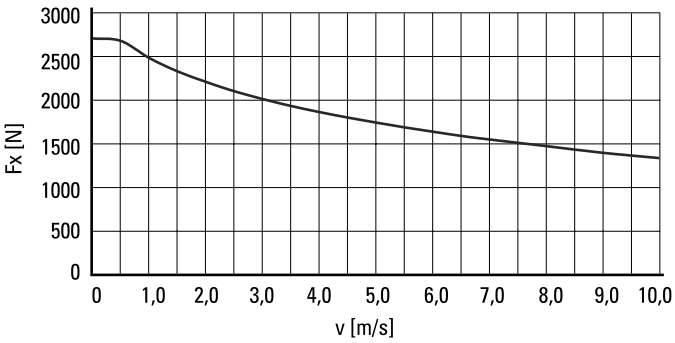

Definition of Forces

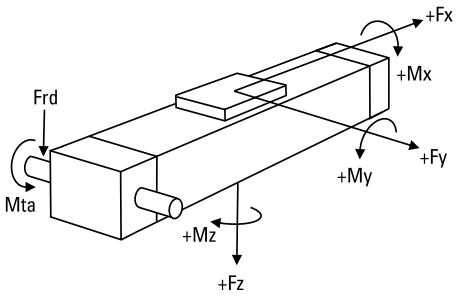

WH80

Belt Drive, Wheel Guide

Dimensions	Projection
METRIC	

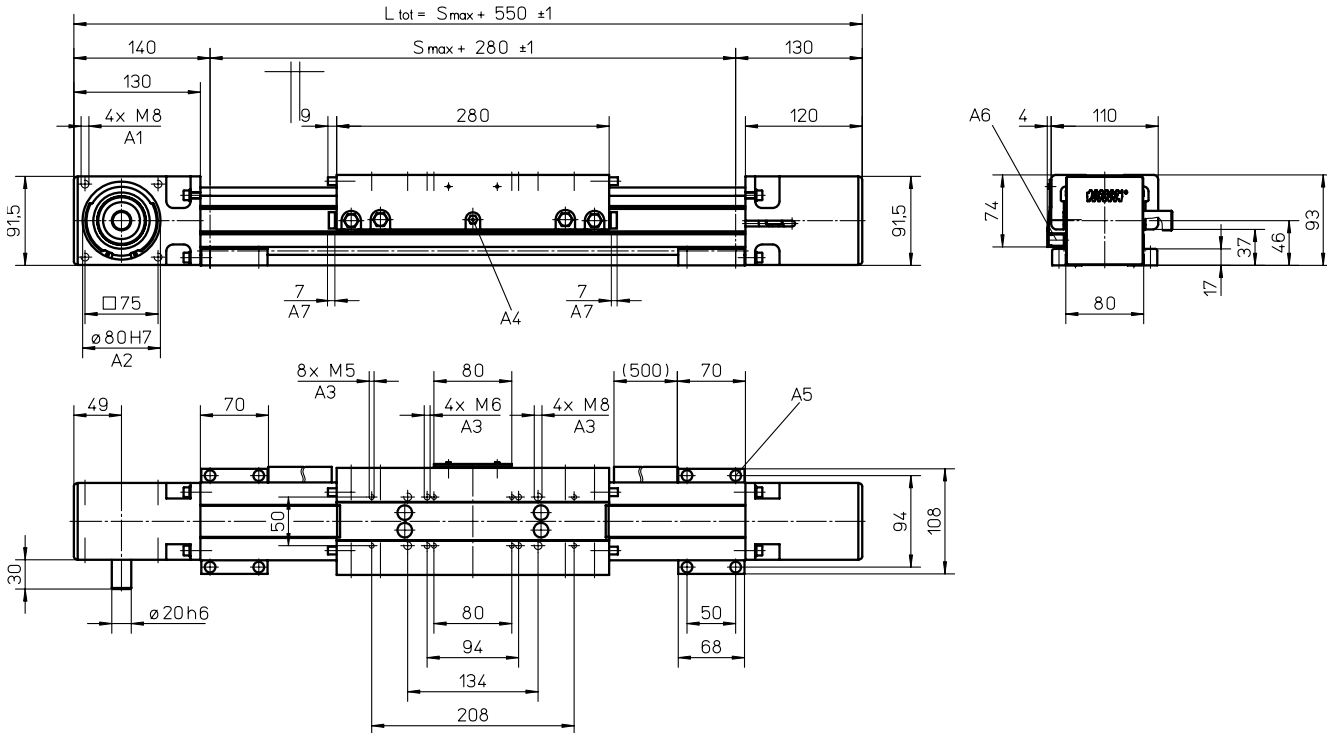

A1: depth 16
A2: depth 2,5
A3: depth 12
A4: funnel type lubricating nipple DIN3405-M6×1-D1
A5: socket cap screw ISO4762-M6×20 8.8
A6: ENF inductive sensor rail kit (optional - see page 172)
A7: felt pad wipers on both sides of the carriage

Performance Specifications
for Units with Single Long Carriage (L)

Parameter		WH80
Stroke length (Smax), maximum	[mm]	11000
Total length (L tot), maximum	[mm]	11720
Carriage length	[mm]	450
Dynamic load torque (My), maximum	[Nm]	345
Dynamic load torque (Mz), maximum	[Nm]	150
Weight	[kg]	3,43

Performance Specifications
for Units with Double Standard Carriage (Z)

Parameter		WH80
Stroke length (Smax), maximum	[mm]	10870
Total length (L tot), maximum	[mm]	11720
Minimum distance between carriages (L_A)	[mm]	300
Dynamic load (Fy), maximum	[N]	1764
Dynamic load (Fz), maximum	[N]	4200
Dynamic load torque (My), maximum	[Nm]	L_A[1] × 0,882
Dynamic load torque (Mz), maximum	[Nm]	L_A[1] × 2,1
Force required to move second carriage	[N]	20
Total length (L tot)	[mm]	Smax + 550 + L_A

[1] Value in mm

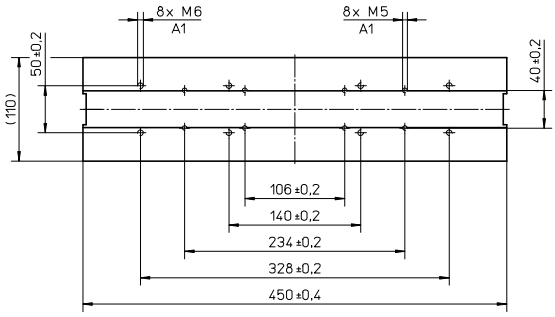

A1: depth 12

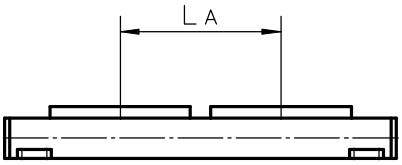

WH120

Belt Drive, Wheel Guide

» Ordering key - see page 201
» Accessories - see page 131
» Additional data - see page 180

General Specifications

Parameter	WH120
Profile size (w × h) [mm]	120 × 110
Type of belt	50ATL10
Carriage sealing system	none
Adjustable belt tensioning	the belt can be retensioned by the customer if necessary
Lubrication	lubrication og guiding surfaces
Included accessories	4 × mounting clamps

Performance Specifications

for Units with Single Standard Carriage (N)[1]

Parameter		WH120
Stroke length (Smax), maximum	[mm]	11000
Total length (L tot), maximum	[mm]	11605
Linear speed, maximum	[m/s]	10,0
Acceleration, maximum	[m/s²]	40
Repeatability	[± mm]	0,05
Input speed, maximum	[rpm]	2308
Operation temperature limits	[°C]	0 – 80
Dynamic load (Fx), maximum	[N]	5000 [2]
Dynamic load (Fy), maximum	[N]	4980
Dynamic load (Fz), maximum	[N]	9300
Dynamic load torque (Mx), maximum	[Nm]	500
Dynamic load torque (My), maximum	[Nm]	930
Dynamic load torque (Mz), maximum	[Nm]	500
Drive shaft force (Frd), maximum	[N]	700
Drive shaft torque (Mta), maximum	[Nm]	200
Pulley diameter	[mm]	82,76
Stroke per shaft revolution	[mm]	260
Weight	[kg]	
of unit with zero stroke		17,00
of every 100 mm of stroke		1,64
of each carriage		5,50

[1] See next page for deviating values of units with other carriage types.
[2] See diagram Force Fx.

Carriage Idle Torque, (M idle) [Nm]

Input speed [rpm]	Idle torque [Nm]
150	4,8
1500	7,0
2308	10,0

M idle = the input torque needed to move the carriage with no load on it.

Deflection of the Profile

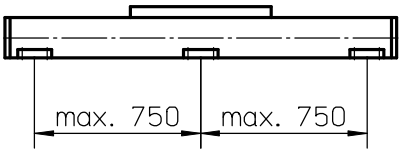

A mounting clamp must be installed at least every 750 mm to be able to operate at maximum load. Less clamps may be required if less load is being operated, see the additional technical data for more information. Units with a profile length over 4900 mm consist of two profiles where the joint between the two profiles must be adequately supported on both sides.

Force Fx as a Function of the Speed

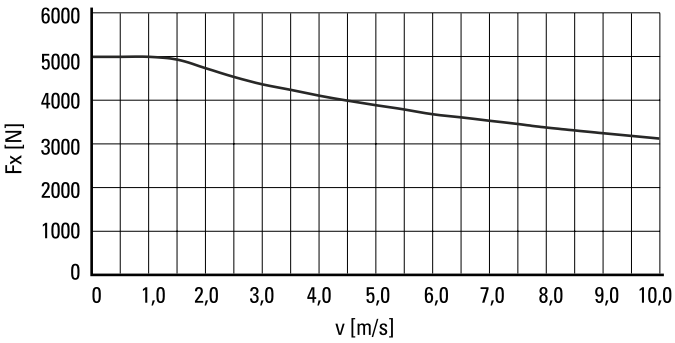

Definition of Forces

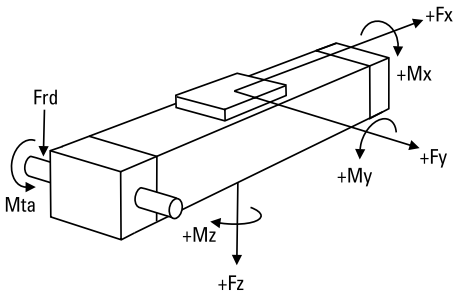

WH120

Belt Drive, Wheel Guide

Dimensions	Projection
METRIC	

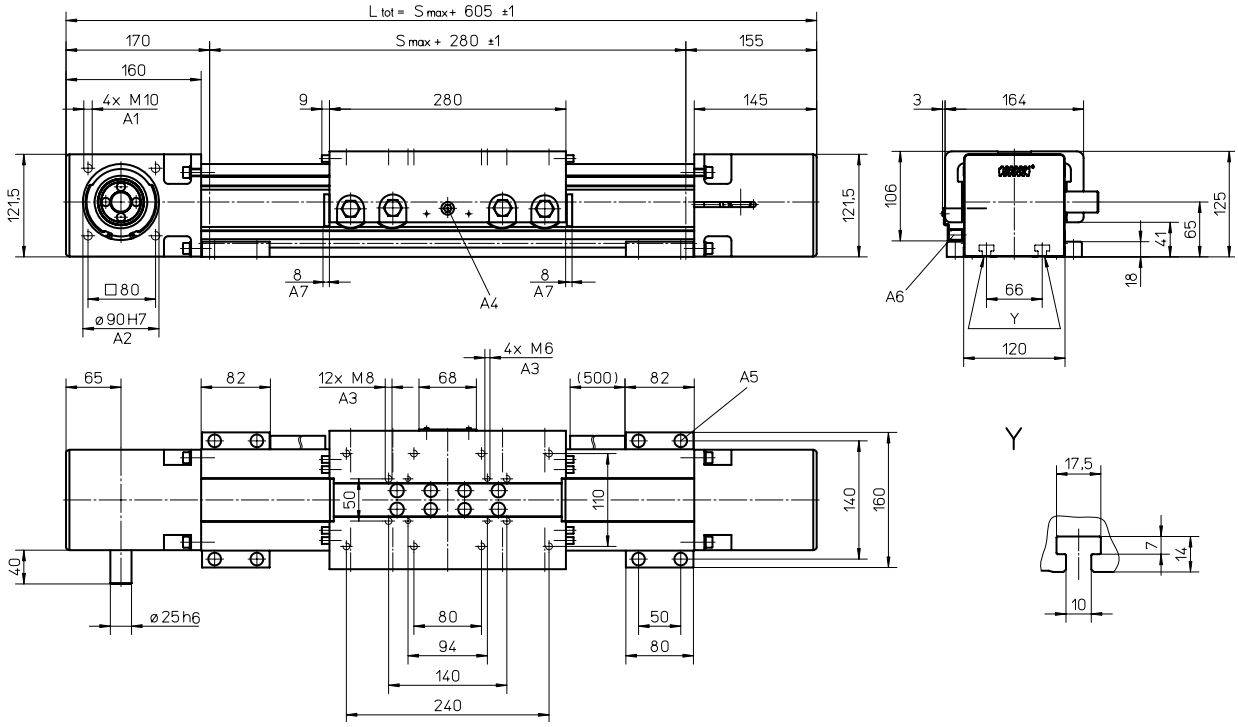

A1: depth 20
A2: depth 7
A3: depth 12
A4: funnel type lubricating nipple DIN3405-M6×1-D1
A5: socket cap screw ISO4762-M8×20 8.8
A6: ENF inductive sensor rail kit (optional - see page 172)
A7: felt pad wipers on both sides of the carriage

Performance Specifications
for Units with Single Long Carriage (L)

Parameter		WH120
Stroke length (Smax), maximum	[mm]	11000
Total length (L tot), maximum	[mm]	11845
Carriage length	[mm]	520
Dynamic load torque (My), maximum	[Nm]	1395
Dynamic load torque (Mz), maximum	[Nm]	750
Weight	[kg]	8,67

Performance Specifications
for Units with Double Standard Carriage (Z)

Parameter		WH120
Stroke length (Smax), maximum	[mm]	10940
Total length (L tot), maximum	[mm]	11845
Minimum distance between carriages (L_A)	[mm]	300
Dynamic load (Fy), maximum	[N]	9960
Dynamic load (Fz), maximum	[N]	18600
Dynamic load torque (My), maximum	[Nm]	L_A[1] × 4,98
Dynamic load torque (Mz), maximum	[Nm]	L_A[1] × 9,3
Force required to move second carriage	[N]	30
Total length (L tot)	[mm]	Smax + 605 + L_A

[1] Value in mm

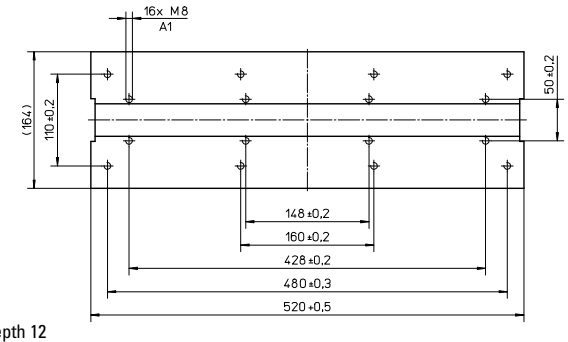

A1: depth 12

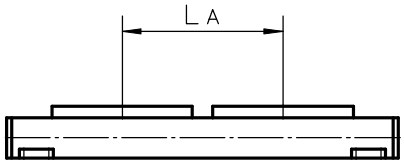

MLSH60Z

Belt Drive, Wheel Guide

» Ordering key - see page 202
» Accessories - see page 131
» Additional data - see page 180

General Specifications

Parameter	MLSH60Z
Profile size (w × h) [mm]	160 × 65
Type of belt	32ATL5
Carriage sealing system	plastic cover band
Adjustable belt tensioning	the belt can be retensioned by the customer if necessary
Lubrication	no lubrication required
Included accessories	4 × mounting clamps

Performance Specifications

for Units with Single Standard Carriage (N)[1]

Parameter		MLSH60Z
Stroke length (Smax), maximum	[mm]	5500
Total length (L tot), maximum	[mm]	5980
Linear speed, maximum	[m/s]	6,5
Acceleration, maximum	[m/s²]	40
Repeatability	[± mm]	0,05
Input speed, maximum	[rpm]	3000
Operation temperature limits	[°C]	0 – 80
Dynamic load (Fx), maximum	[N]	1480 [2]
Dynamic load (Fy), maximum	[N]	3000
Dynamic load (Fz), maximum	[N]	3000
Dynamic load torque (Mx), maximum	[Nm]	165
Dynamic load torque (My), maximum	[Nm]	310
Dynamic load torque (Mz), maximum	[Nm]	310
Drive shaft force (Frd), maximum	[N]	200
Drive shaft torque (Mta), maximum	[Nm]	45
Pulley diameter	[mm]	42,97
Stroke per shaft revolution	[mm]	135
Weight	[kg]	
of unit with zero stroke		12,60
of every 100 mm of stroke		1,33
of each carriage		3,90

[1] See next page for deviating values of units with other carriage types.
[2] See diagram Force Fx.

Carriage Idle Torque, (M idle) [Nm]

Input speed [rpm]	Idle torque [Nm]
150	4,6
1500	9,0
3000	12,0

M idle = the input torque needed to move the carriage with no load on it.

Deflection of the Profile

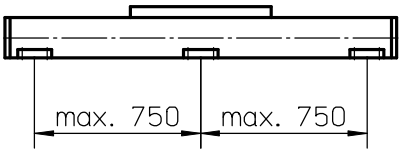

A mounting clamp must be installed at least every 750 mm to be able to operate at maximum load. Less clamps may be required if less load is being operated, see the additional technical data for more information.

Force Fx as a Function of the Speed

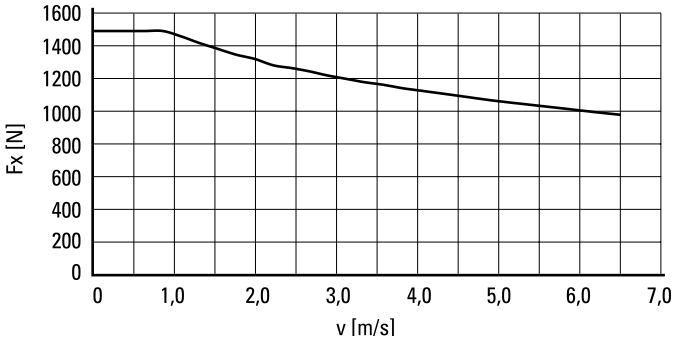

Definition of Forces

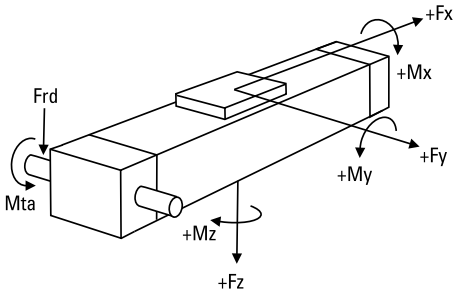

MLSH60Z

Belt Drive, Wheel Guide

Dimensions	Projection
METRIC	

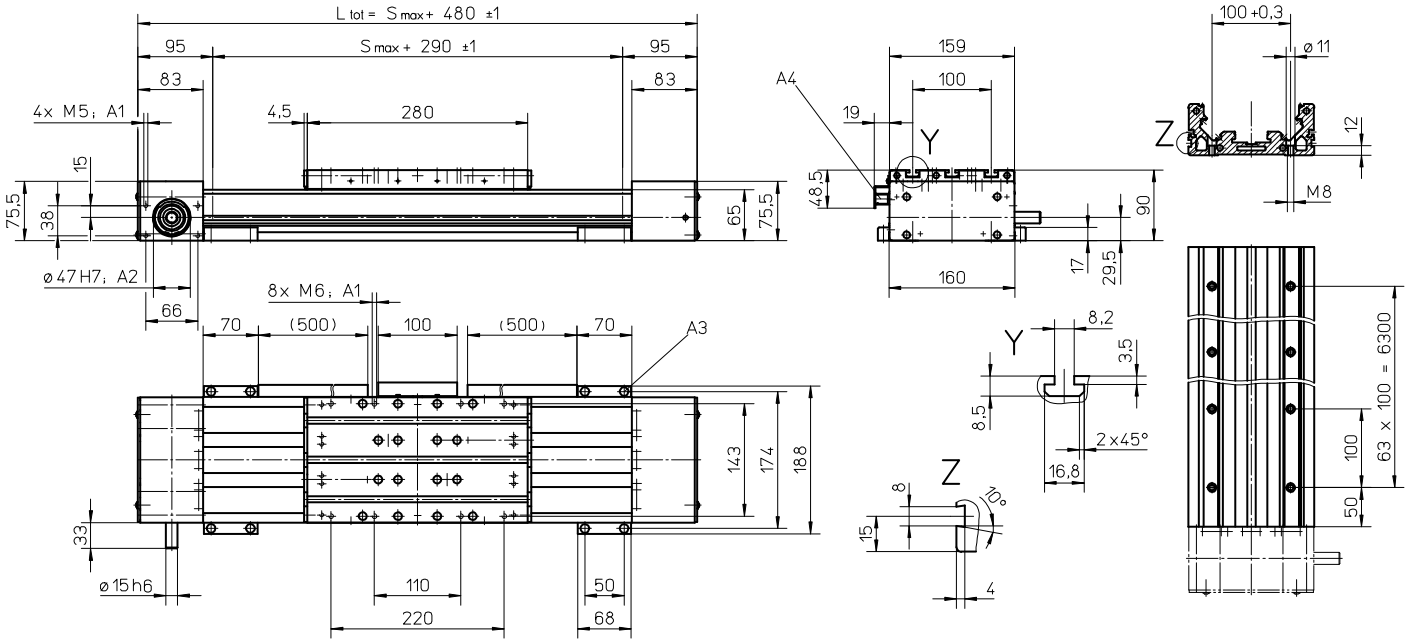

A1: depth 10
A2: depth 4

A3: socket cap screw ISO4762-M6x20 8.8
A4: ENF inductive sensor rail kit (optional - see page 172)

Performance Specifications
for Units with Single Long Carriage (L)

Parameter		MLSH60Z
Stroke length (Smax), maximum	[mm]	5500
Total length (L tot), maximum	[mm]	6150
Carriage length	[mm]	450
Dynamic load torque (My), maximum	[Nm]	585
Dynamic load torque (Mz), maximum	[Nm]	585
Weight	[kg]	6

Performance Specifications
for Units with Double Standard Carriage (Z)

Parameter		MLSH60Z
Stroke length (Smax), maximum	[mm]	5380
Total length (L tot), maximum	[mm]	6150
Minimum distance between carriages (L_A)	[mm]	290
Dynamic load (Fy), maximum	[N]	6000
Dynamic load (Fz), maximum	[N]	6000
Dynamic load torque (My), maximum	[Nm]	L_A[1] × 3
Dynamic load torque (Mz), maximum	[Nm]	L_A[1] × 3
Force required to move second carriage	[N]	10
Total length (L tot)	[mm]	Smax + 480 + L_A

[1] Value in mm

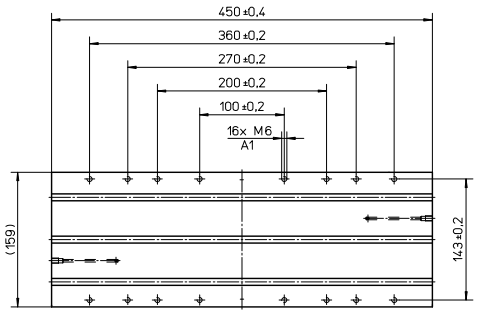

A1: depth 10

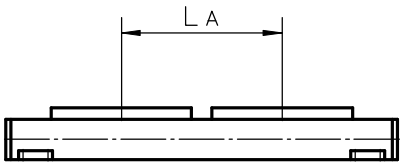

Linear Lifting Units

Overview

SpeedLine WHZ

Features

- Can be installed in any orientation
- Belt drive
- External wheel guides
- Speed up to 10 m/s
- Acceleration up to 40 m/s^2

Parameter		WHZ50	WHZ80
Profile size (width × length)	[mm]	50 × 50	80 × 80
Stroke length (Smax), maximum	[mm]	1500	3000
Linear speed, maximum	[m/s]	6,5	10,0
Dynamic load (Fx), maximum	[N]	670	1480
Remarks		The load is always attached to the end of the lifting profile	The load is always attached to the end of the lifting profile
Page		116	118

Linear Lifting Units

Overview

Movo Z

Z2

Features

- Telescopic movement
- Ball screw drive
- Internal slide guides
- Load up to 7500 N
- Load torque up to 2000 Nm
- Two end stop limit switches (Z2 only)

Parameter		Z2	Z3
Profile size (width × height)	[mm]	188 × 150	188 × 150
Stroke length (Smax), maximum	[mm]	1500	1500
Linear speed, maximum	[m/s]	1,25	1,25
Dynamic load (Fz), maximum	[N]	7500	7500
Remarks		Can be installed in any direction. The load must be attached at the end of the lifting profile	Can only be installed vertically with motor up. The load must be attached at the end of the lifting profile.
Page		120	122

WHZ50

Belt Drive, Wheel Guide

» Ordering key - see page 203
» Accessories - see page 131
» Additional data - see page 181

General Specifications

Parameter	WHZ50
Profile size (w × h) [mm]	50 × 50
Type of belt	16 ATL 5
Carriage sealing system	none
Adjustable belt tensioning	the belt can be retensioned by the customer if necessary
Lubrication	lubrication of carriage and guide surfaces
Included accessories	-

Performance Specifications

for Units with Single Standard Carriage (N)[1]

Parameter		WHZ50
Stroke length (Smax), maximum	[mm]	1500
Total length (L tot), maximum	[mm]	1850
Linear speed, maximum	[m/s]	6,5
Acceleration, maximum	[m/s²]	40
Repeatability	[± mm]	0,05
Input speed, maximum	[rpm]	3250
Operation temperature limits	[°C]	0 – 80
Dynamic load (Fx), maximum	[N]	670 [2]
Dynamic load (Fy), maximum	[N]	415
Dynamic load (Fz), maximum	[N]	730
Dynamic load torque (Mx), maximum	[Nm]	16
Dynamic load torque (My), maximum	[Nm]	87
Dynamic load torque (Mz), maximum	[Nm]	50
Drive shaft force (Frd), maximum	[N]	150
Drive shaft torque (Mta), maximum	[Nm]	17
Pulley diameter	[mm]	38,2
Stroke per shaft revolution	[mm]	120
Weight	[kg]	
of unit with zero stroke		4,50
of every 100 mm of stroke		0,42
of each drive station box		2,90

[1] See next page for deviating values of units with other carriage types.
[2] See diagram Force Fx.

Carriage Idle Torque, (M idle) [Nm]

Input speed [rpm]	Idle torque [Nm]
150	1,7
1500	2,4
3250	3,8

M idle = the input torque needed to move the carriage with no load on it.

Force Fx as a Function of the Speed

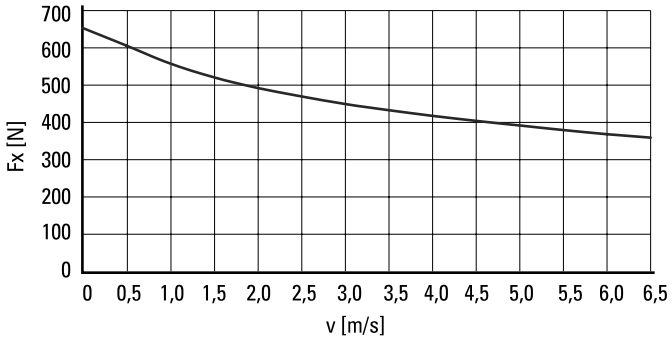

Definition of Forces

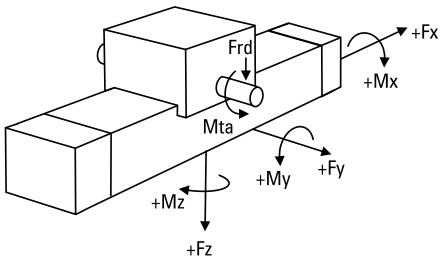

WHZ50

Belt Drive, Wheel Guide

Dimensions	Projection
METRIC	

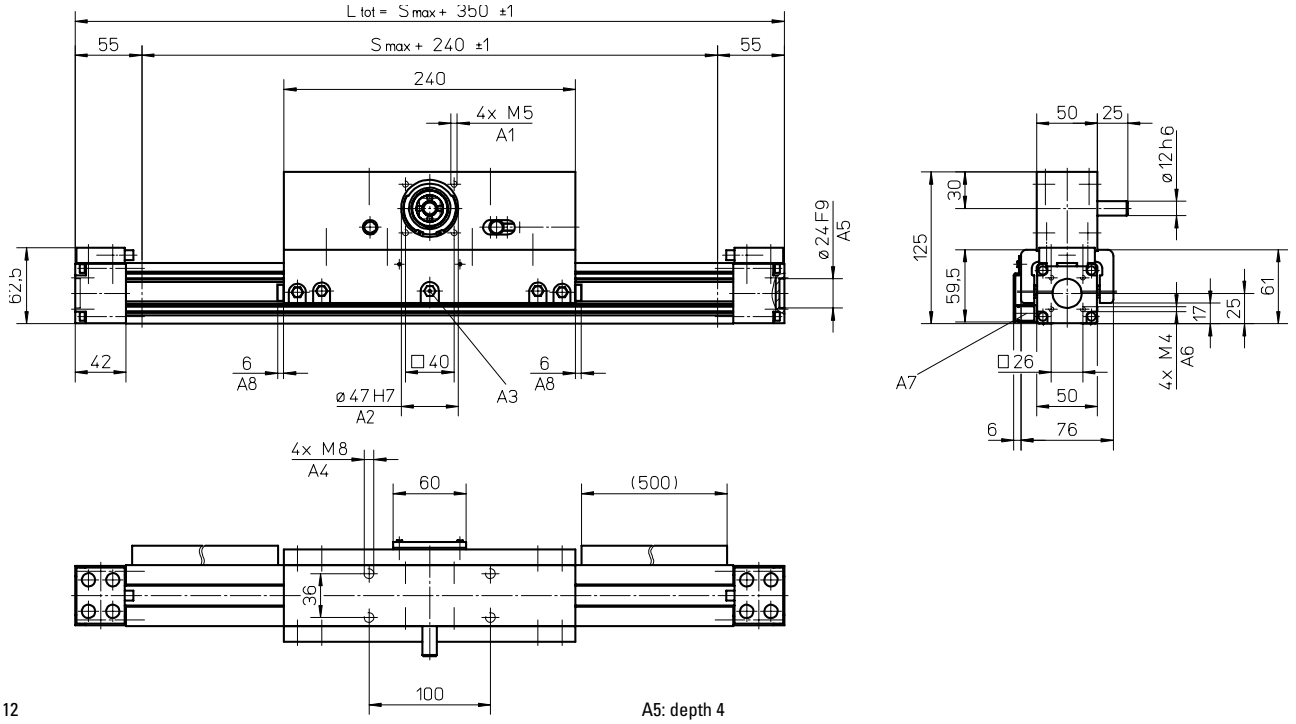

A1: depth 12
A2: depth 3,5
A3: funnel type lubricating nipple DIN3405-M6×1-D1
A4: depth 16
A5: depth 4
A6: depth 8
A7: ENF inductive sensor rail kit (optional - see page 172)
A8: felt pad wipers on both sides of the carriage

Performance Specifications
for Units with Single Long Carriage (L)

Parameter		WHZ50
Stroke length (Smax), maximum	[mm]	1500
Total length (L tot), maximum	[mm]	2010
Carriage length	[mm]	400
Dynamic load torque (My), maximum	[Nm]	130
Dynamic load torque (Mz), maximum	[Nm]	75
Weight	[kg]	3,3

Performance Specifications
for Units with Double Standard Carriage (Z)

Parameter		WHZ50
Stroke length (Smax), maximum	[mm]	1400
Total length (L tot), maximum	[mm]	2010
Minimum distance between carriages (L_A)	[mm]	260
Dynamic load (Fy), maximum	[N]	830
Dynamic load (Fz), maximum	[N]	1460
Dynamic load torque (My), maximum	[Nm]	L_A[1] × 0,415
Dynamic load torque (Mz), maximum	[Nm]	L_A[1] × 0,73
Force required to move second carriage	[N]	16
Total length (L tot)	[mm]	Smax + 350 + L_A

[1] Value in mm

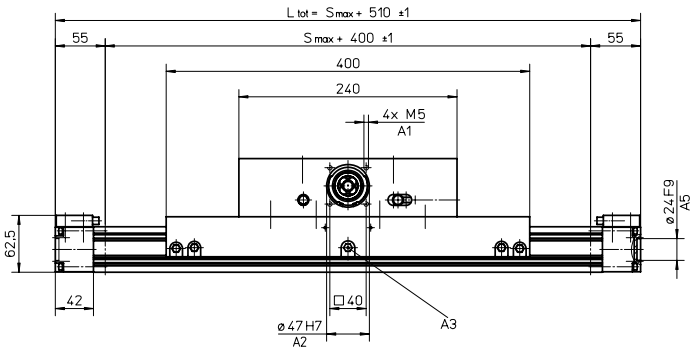

A1: depth 12
A2: depth 3,5
A3: funnel type lubricating nipple DIN3405-M6×1-D1
A5: depth 4

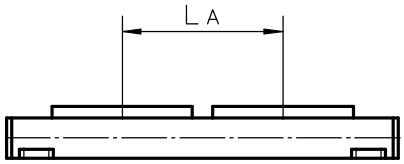

WHZ80

Belt Drive, Wheel Guide

» Ordering key - see page 203
» Accessories - see page 131
» Additional data - see page 181

General Specifications

Parameter	WHZ80
Profile size (w × h) [mm]	80 × 80
Type of belt	32 ATL 5
Carriage sealing system	none
Adjustable belt tensioning	the belt can be retensioned by the customer if necessary
Lubrication	lubrication of carriage and guide surfaces
Included accessories	-

Performance Specifications

for Units with Single Standard Carriage (N)[1]

Parameter		WHZ80
Stroke length (Smax), maximum	[mm]	3000
Total length (L tot), maximum	[mm]	3410
Linear speed, maximum	[m/s]	10,0
Acceleration, maximum	[m/s²]	40
Repeatability	[± mm]	0,05
Input speed, maximum	[rpm]	3000
Operation temperature limits	[°C]	0 – 80
Dynamic load (Fx), maximum	[N]	1480 [2]
Dynamic load (Fy), maximum	[N]	882
Dynamic load (Fz), maximum	[N]	2100
Dynamic load torque (Mx), maximum	[Nm]	75
Dynamic load torque (My), maximum	[Nm]	230
Dynamic load torque (Mz), maximum	[Nm]	100
Drive shaft force (Frd), maximum	[N]	500
Drive shaft torque (Mta), maximum	[Nm]	50
Pulley diameter	[mm]	63,66
Stroke per shaft revolution	[mm]	200
Weight	[kg]	
of unit with zero stroke		11,20
of every 100 mm of stroke		0,91
of each drive station box		6,65

[1] See next page for deviating values of units with other carriage types.
[2] See diagram Force Fx.

Carriage Idle Torque, (M idle) [Nm]

Input speed [rpm]	Idle torque [Nm]
150	2,4
1500	3,5
3000	5,0

M idle = the input torque needed to move the carriage with no load on it.

Force Fx as a Function of the Speed

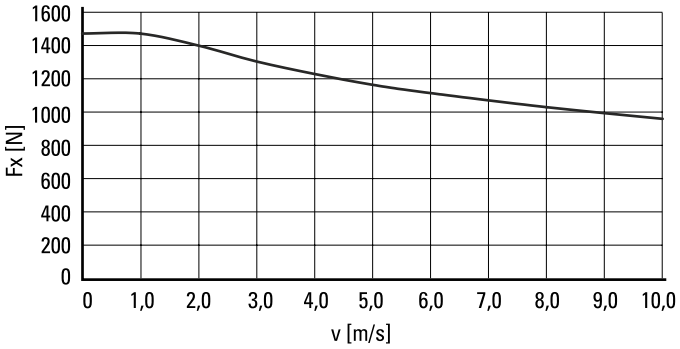

Definition of Forces

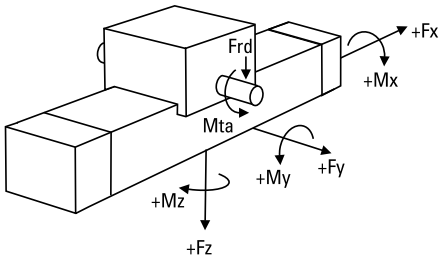

WHZ80

Belt Drive, Wheel Guide

Dimensions	Projection
METRIC	

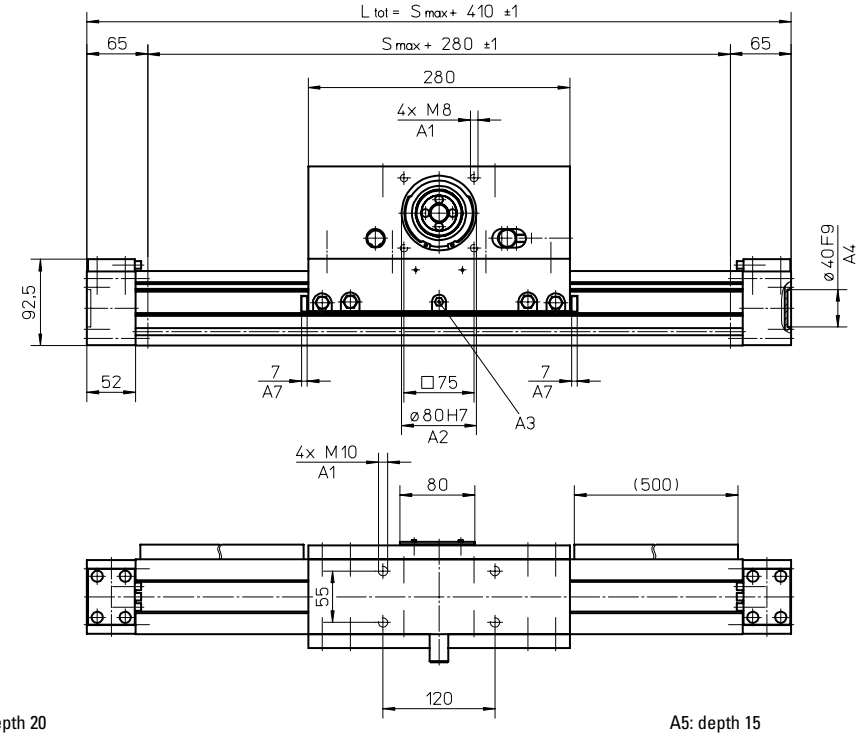

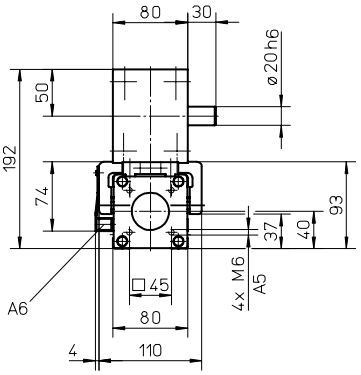

A1: depth 20
A2: depth 3,5
A3: funnel type lubricating nipple DIN3405-M6×1-D1
A4: depth 4
A5: depth 15
A6: ENF inductive sensor rail kit (optional - see page 172)
A7: felt pad wipers on both sides of the carriage

Performance Specifications
for Units with Single Long Carriage (L)

Parameter		WHZ80
Stroke length (Smax), maximum	[mm]	3000
Total length (L tot), maximum	[mm]	3580
Carriage length	[mm]	450
Dynamic load torque (My), maximum	[Nm]	345
Dynamic load torque (Mz), maximum	[Nm]	150

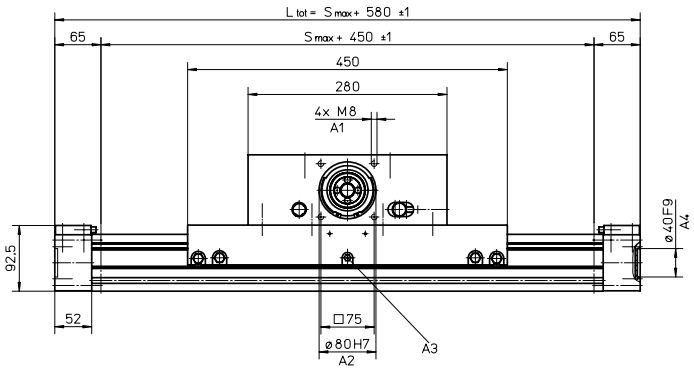

A1: depth 20
A2: depth 3,5
A3: funnel type lubricating nipple DIN3405-M6×1-D1
A4: depth 4

Performance Specifications
for Units with Double Standard Carriage (Z)

Parameter		WHZ80
Stroke length (Smax), maximum	[mm]	2870
Total length (L tot), maximum	[mm]	3580
Minimum distance between carriages (L_A)	[mm]	300
Dynamic load (Fy), maximum	[N]	1764
Dynamic load (Fz), maximum	[N]	4200
Dynamic load torque (My), maximum	[Nm]	L_A[1] × 0,882
Dynamic load torque (Mz), maximum	[Nm]	L_A[1] × 2,1
Force required to move second carriage	[N]	20
Total length (L tot)	[mm]	Smax + 410 + L_A

[1] Value in mm
[2] Second carriage is always a long carriage

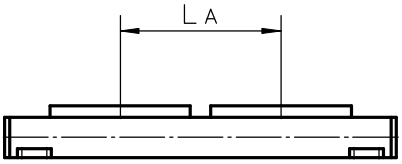

Z2

Ball Screw Drive, Slide Guide

» Ordering key - see page 203
» Accessories - see page 131
» Additional data - see page 181

General Specifications

Parameter	Z2
Profile size (w × h) [mm]	188 × 150
Type of screw	ball screw with single nut
Sealing system	none
Screw supports	none
Lubrication	lubrication of screw and slide surfaces
Included accessories	none

Performance Specifications

Parameter		Z2
Stroke length (Smax), maximum	[mm]	1500
Linear speed, maximum	[m/s]	1,25
Acceleration, maximum	[m/s²]	8
Repeatability	[± mm]	0,1
Input speed, maximum screw diameter/lead [mm] 25/10, 25/25 screw diameter/lead [mm] 32/20	[rpm]	 3000 2500
Operation temperature limits	[°C]	-20 – 70
Dynamic load (Fz), maximum screw diameter/lead [mm] 25/10, 25/25 screw diameter/lead [mm] 32/20	[N]	 5000 7500
Dynamic load torque (Mx), maximum	[Nm]	700
Dynamic load torque (My), maximum	[Nm]	700
Dynamic load torque (Mz), maximum	[Nm]	330
Drive shaft force (Frd), maximum screw diameter/lead [mm] 25/10, 25/25 screw diameter/lead [mm] 32/20	[N]	 1000 1200
Drive shaft torque (Mta), maximum screw diameter/lead [mm] 25/10, 25/25 screw diameter/lead [mm] 32/20	[Nm]	 45 93
Screw versions, diameter (d_0) / lead (p)	[mm]	25/10, 25/25, 32/20
Weight of unit with zero stroke, ball screw ø 25 mm of unit with zero stroke, ball screw ø 32 mm of every 100 mm of stroke, ball screw ø 25 mm of every 100 mm of stroke, ball screw ø 32 mm	[kg]	 19,00 23,64 2,50 2,80

Idle Torque (M idle) [Nm]

Input speed [rpm]	Screw diameter/lead [mm]		
	d_0 = 25 / p = 10	d_0 = 25 / p = 25	d_0 = 32 / p = 20
500	0,7	1,9	1,5

M idle = the input torque needed to move the lifting profiles without any load.

Critical Speed

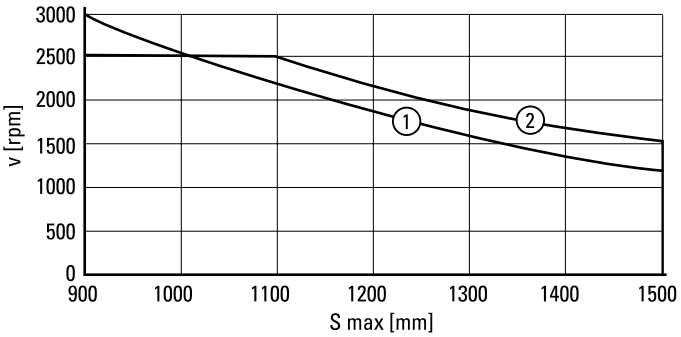

1: screw diameter 25 mm
2: screw diameter 32 mm

Definition of Forces and Stroke

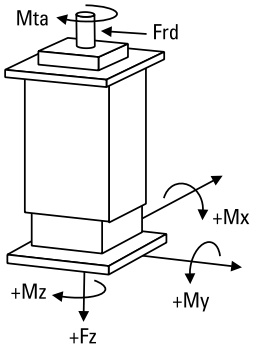

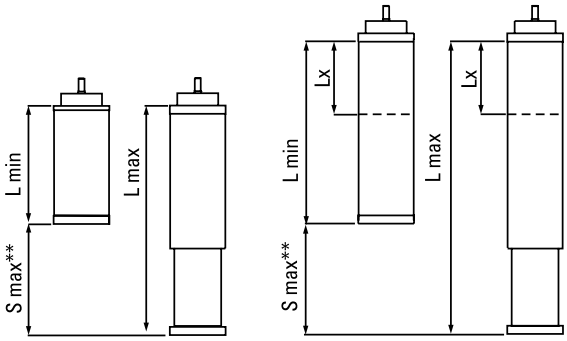

** Smax = maximum stroke between the mechanical ends of the unit. The practical stroke is normally 100 mm shorter to avoid running into the ends of the unit.

Z2

Ball Screw Drive, Slide Guide

Dimensions	Projection
METRIC	

MGZ2K25
screw ø25 mm

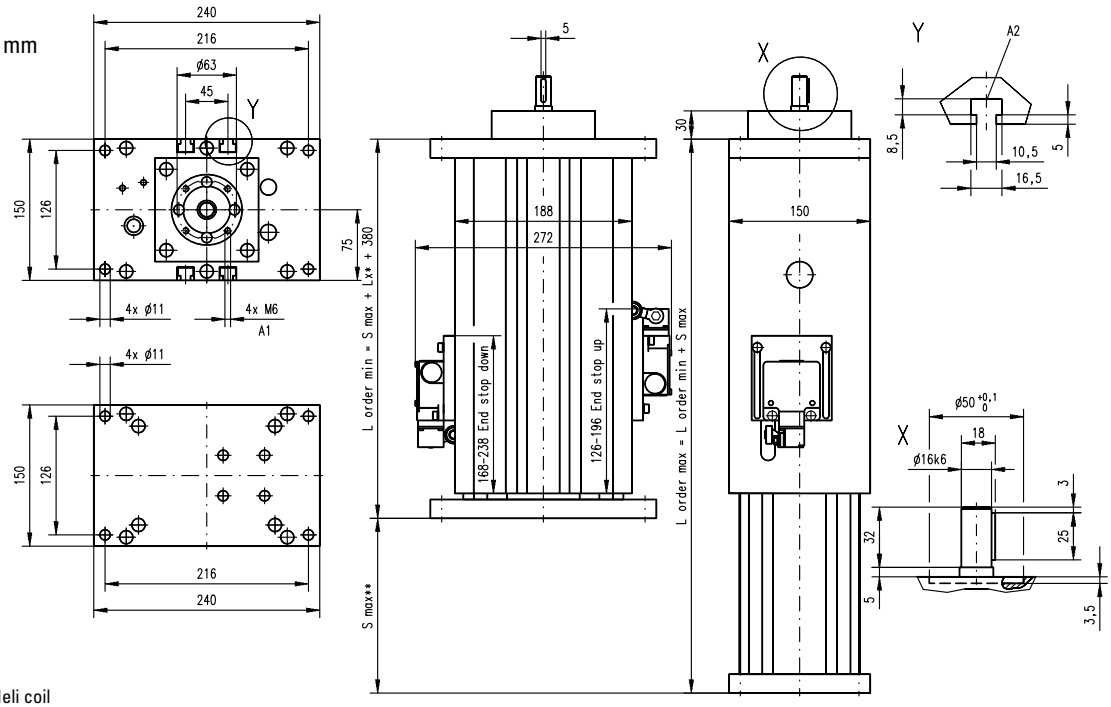

A1: depth 9, Heli coil
A2: T-slot

MGZ2K32
screw ø32 mm

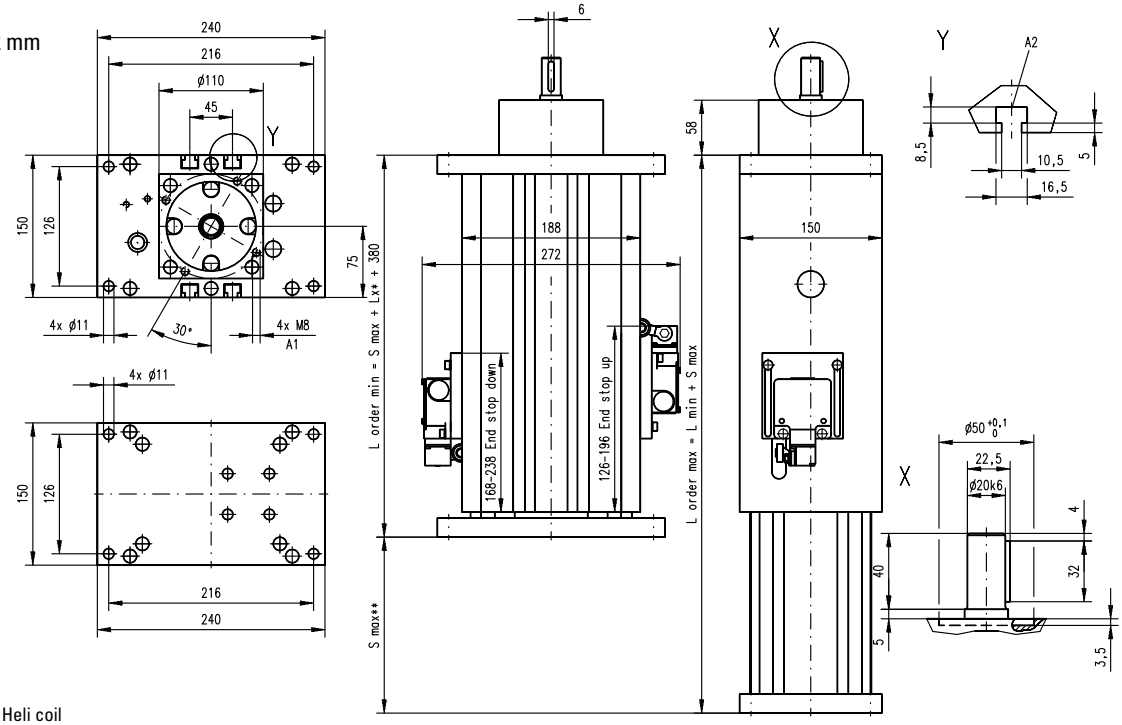

A1: depth 12, Heli coil
A2: T-slot

Type of unit	Minimum retracted length (L min) [mm]	Maximum extended length (L max) [mm]
Standard	L min = Smax + 380	L max = L min + Smax
Elongated*	L min = Smax + 380 + Lx	L max = L min + Smax

* Elongated versions have an extra length (Lx) added to the total length of the unit which makes the unit longer but does not add any extra length to the stroke (Smax).

Z3

Ball Screw Drive, Slide Guide

» Ordering key - see page 203
» Accessories - see page 131
» Additional data - see page 181

General Specifications

Parameter	Z3
Profile size (w × h) [mm]	188 × 150
Type of screw	ball screw with single nut
Sealing system	none
Screw supports	none
Lubrication	lubrication of screw and slide surfaces
Included accessories	none

Performance Specifications

Parameter		Z3
Stroke length (Smax), maximum	[mm]	1500
Linear speed, maximum	[m/s]	1,25
Acceleration, maximum	[m/s²]	8
Repeatability	[± mm]	0,1
Input speed, maximum screw diameter/lead [mm] 25/10, 25/25 screw diameter/lead [mm] 32/20	[rpm]	 3000 2500
Operation temperature limits	[°C]	-20 – 70
Dynamic load (Fz), maximum screw diameter/lead [mm] 25/10, 25/25 screw diameter/lead [mm] 32/20	[N]	 5000 7500
Dynamic load torque (Mx), maximum	[Nm]	2000
Dynamic load torque (My), maximum	[Nm]	2000
Dynamic load torque (Mz), maximum	[Nm]	330
Drive shaft force (Frd), maximum screw diameter/lead [mm] 25/10, 25/25 screw diameter/lead [mm] 32/20	[N]	 1000 1200
Drive shaft torque (Mta), maximum screw diameter/lead [mm] 25/10, 25/25 screw diameter/lead [mm] 32/20	[Nm]	 45 93
Screw versions, diameter (d0) / lead (p)	[mm]	25/10, 25/25, 32/20
Weight of unit with zero stroke, ball screw ø 25 mm of unit with zero stroke, ball screw ø 32 mm of every 100 mm of stroke, ball screw ø 25 mm of every 100 mm of stroke, ball screw ø 32 mm	[kg]	 21,14 22,65 4,20 4,50

Idle Torque (M idle) [Nm]

Input speed [rpm]	Screw diameter/lead [mm]		
	d0 = 25 / p = 10	d0 = 25 / p = 25	d0 = 32 / p = 20
500	1,1	2,7	2,2

M idle = the input torque needed to move the lifting profiles without any load.

Critical Speed

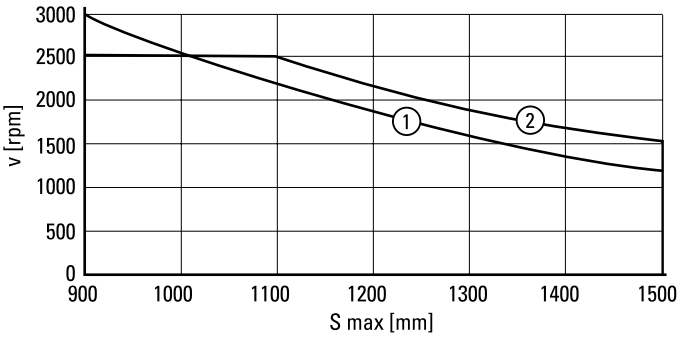

1: screw diameter 25 mm
2: screw diameter 32 mm

Definition of Forces and Stroke

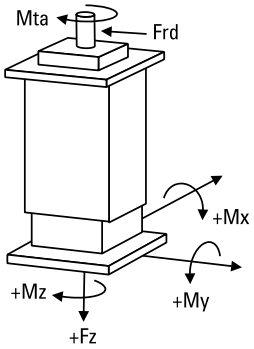

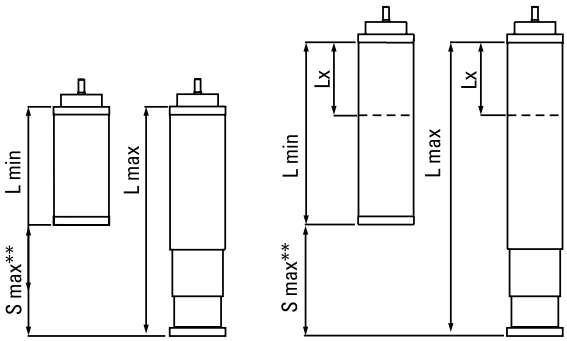

** Smax = maximum stroke between the mechanical ends of the unit. The practical stroke is normally 100 mm shorter to avoid running into the ends of the unit.

Z3

Ball Screw Drive, Slide Guide

Dimensions	Projection
METRIC	

MGZ3K25
screw ø25 mm

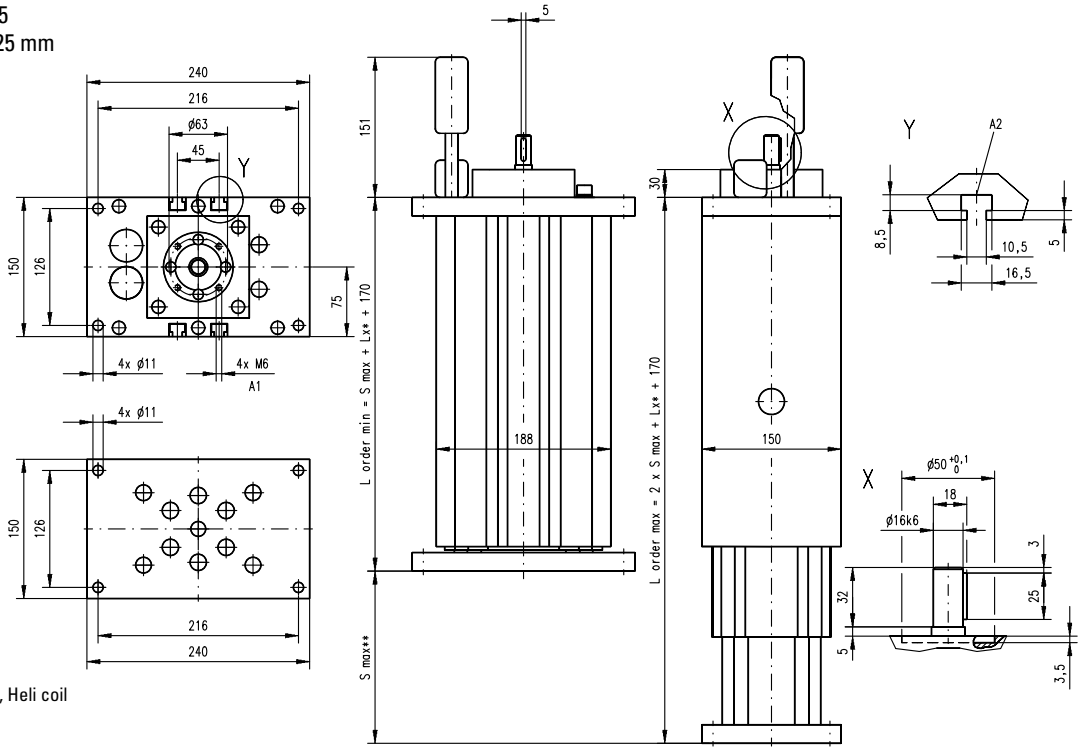

A1: depth 9, Heli coil
A2: T-slot

MGZ3K32
screw ø32 mm

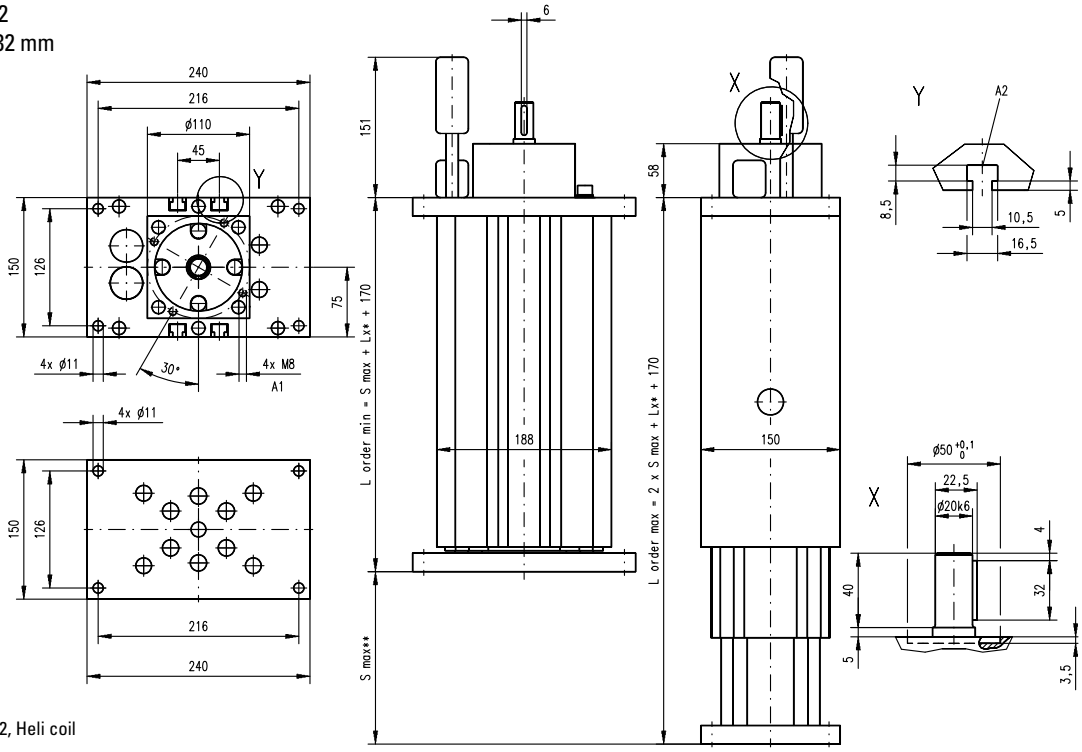

A1: depth 12, Heli coil
A2: T-slot

Type of unit	Minimum retracted length (L min) [mm]	Maximum extended length (L max) [mm]
Standard	L min = Smax + 170	L max = L min + Smax
Elongated*	L min = Smax + 170 + Lx	L max = L min + Smax

* Elongated versions have an extra length (Lx) added to the total length of the unit which makes the unit longer but does not add any extra length to the stroke (Smax).

Linear Rod Units

Overview

VarioLine WZ

Features

- Can be installed in any orientation
- Ball screw drive
- Ball guides
- Compact

Parameter		WZ60	WZ80
Profile size (width × height)	[mm]	60 × 60	80 × 80
Stroke length (Smax), maximum	[mm]	400	500
Linear speed, maximum	[m/s]	1,5	1,5
Dynamic carriage load (Fx), maximum	[N]	2800	3500
Remarks		-	-
Page		126	128

Linear Rod Units

Overview

WZ-Series Technical Presentation

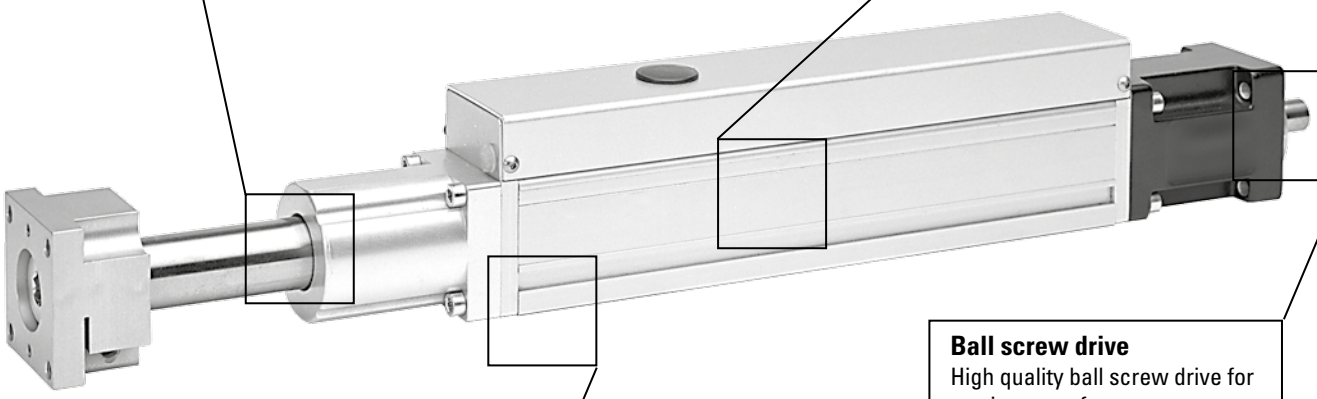

High sideloads
The design of the extension tube allow the unit to handle high sideloads as well as torsional forces.

Ball guides
The ball guides ensure smooth and accurate operation.

Ball screw drive
High quality ball screw drive for maximum performance.

Compact design
The compact design allow the unit to be used in equipment where a linear motion system with a carriage would not fit.

WZ60

Ball Screw Drive, Ball Guide

» Ordering key - see page 204
» Accessories - see page 131
» Additional data - see page 182

General Specifications

Parameter	WZ60
Profile size (w × h) [mm]	60 × 60
Type of screw	single nut ball screw
Lubrication	central lubrication of all parts that require lubrication
Included accessories	4 × mounting clamps

Rod Idle Torque (M idle) [Nm]

Input speed [rpm]	Screw lead [mm]		
	p = 5	p = 20	p = 50
150	0,7	1,0	1,4
1500	1,1	1,6	2,0
3000	1,5	1,8	2,2

M idle = the input torque needed to move the rod with no load on it.

Performance Specifications

Parameter		WZ60
Stroke length (Smax), maximum	[mm]	400
Linear speed, maximum	[m/s]	1,5
Acceleration, maximum	[m/s²]	20
Repeatability	[± mm]	0,02
Input speed, maximum	[rpm]	3000
Operation temperature limits	[°C]	0 – 80
Dynamic load (Fx), maximum	[N]	2800
Dynamic load (Fy), maximum	[N]	2000 [1]
Dynamic load (Fz), maximum	[N]	2000 [1]
Dynamic load torque (Mx), maximum	[Nm]	50 [1]
Drive shaft force (Frd), maximum	[N]	500
Drive shaft torque (Mta), maximum	[Nm]	30
Ball screw diameter (d_0)	[mm]	20
Ball screw lead (p)	[mm]	5, 20, 50
Weight	[kg]	
of unit with zero stroke		4,5
of every 100 mm of stroke		0,77
of the rod with zero stroke		1,8
of every 100 mm of rod		0,26

[1] Also see diagrams on next page

Definition of Forces

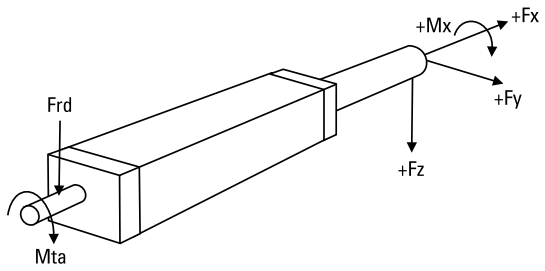

WZ60

Ball Screw Drive, Ball Guide

Dimensions	Projection
METRIC	

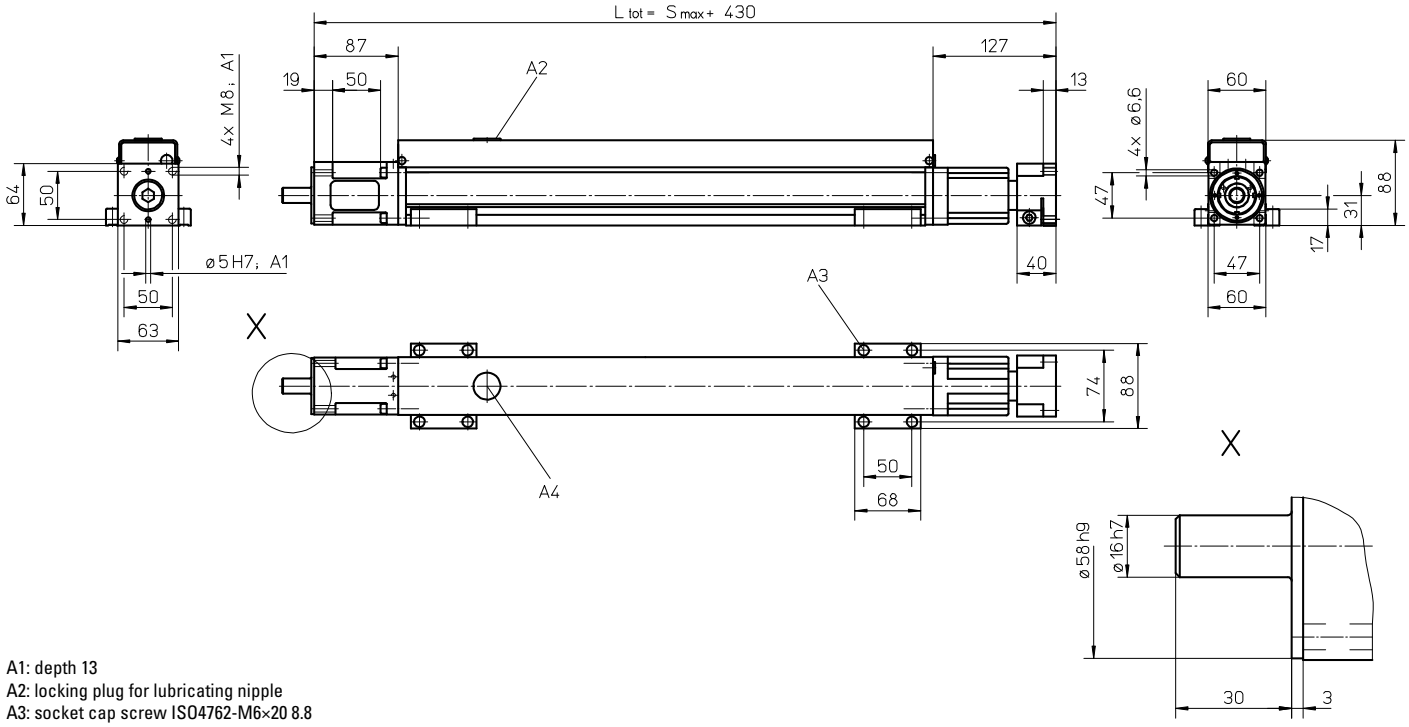

A1: depth 13
A2: locking plug for lubricating nipple
A3: socket cap screw ISO4762-M6×20 8.8
A4: tapered lubricating nipple to DIN71412 AM6 as standard feature

Maximum Rod Side Forces (Fy, Fz)

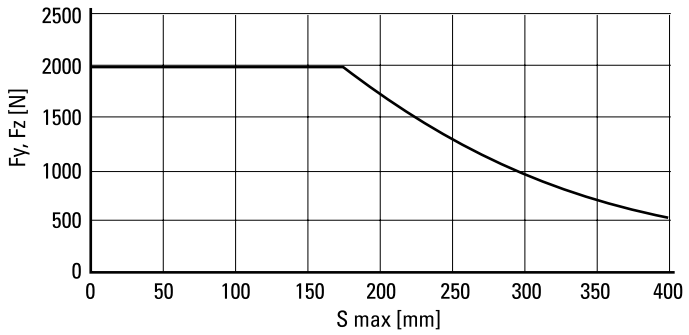

Deflection (f) of Rod due to Fy and Fz

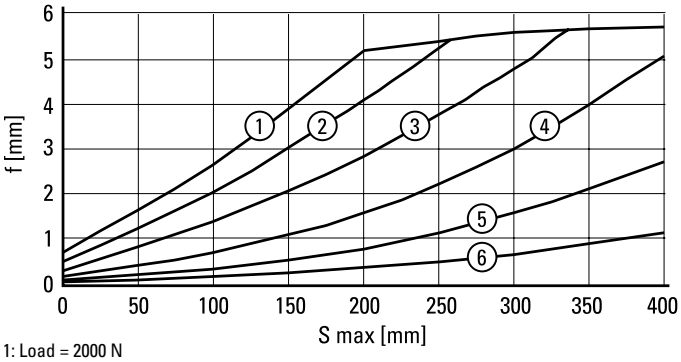

1: Load = 2000 N
2: Load = 1500 N
3: Load = 1000 N
4: Load = 500 N
5: Load = 250 N
6: Load = 125 N

Torsion (φ) of Rod due to Mx

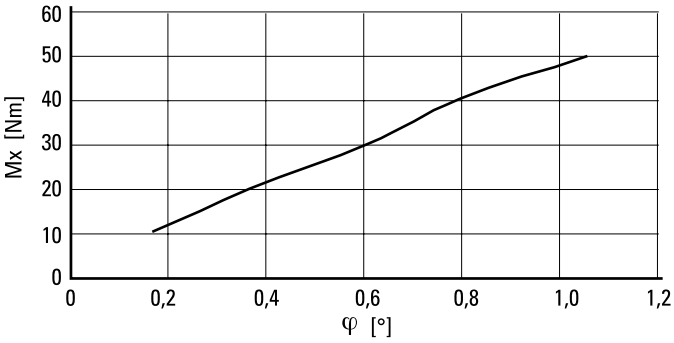

WZ80

Ball Screw Drive, Ball Guide

» Ordering key - see page 204
» Accessories - see page 131
» Additional data - see page 182

General Specifications

Parameter	WZ80
Profile size (w × h) [mm]	80 × 80
Type of screw	single nut ball screw
Lubrication	central lubrication of all parts that require lubrication
Included accessories	4 × mounting clamps

Rod Idle Torque (M idle) [Nm]

Input speed [rpm]	Screw lead [mm]			
	p = 5	p = 10	p = 20	p = 50
150	0,6	1,1	1,3	1,8
1500	1,1	1,5	1,6	2,2
3000	1,4	1,8	1,8	2,7

M idle = the input torque needed to move the rod with no load on it.

Performance Specifications

Parameter		WZ80
Stroke length (Smax), maximum	[mm]	500
Linear speed, maximum	[m/s]	1,5
Acceleration, maximum	[m/s²]	20
Repeatability	[± mm]	0,02
Input speed, maximum	[rpm]	3000
Operation temperature limits	[°C]	0 – 80
Dynamic load (Fx), maximum	[N]	3500
Dynamic load (Fy), maximum	[N]	3000 [1]
Dynamic load (Fz), maximum	[N]	3000 [1]
Dynamic load torque (Mx), maximum	[Nm]	150 [1]
Drive shaft force (Frd), maximum	[N]	700
Drive shaft torque (Mta), maximum	[Nm]	55
Ball screw diameter (d_0)	[mm]	25
Ball screw lead (p)	[mm]	5, 10, 20, 50
Weight	[kg]	
of unit with zero stroke		7,5
of every 100 mm of stroke		1,35
of the rod with zero stroke		3,0
of every 100 mm of rod		0,5

[1] Also see diagrams on next page

Definition of Forces

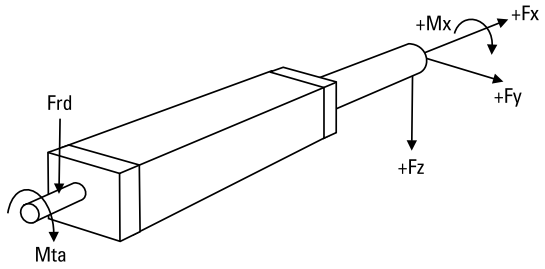

WZ80

Ball Screw Drive, Ball Guide

Dimensions	Projection
METRIC	

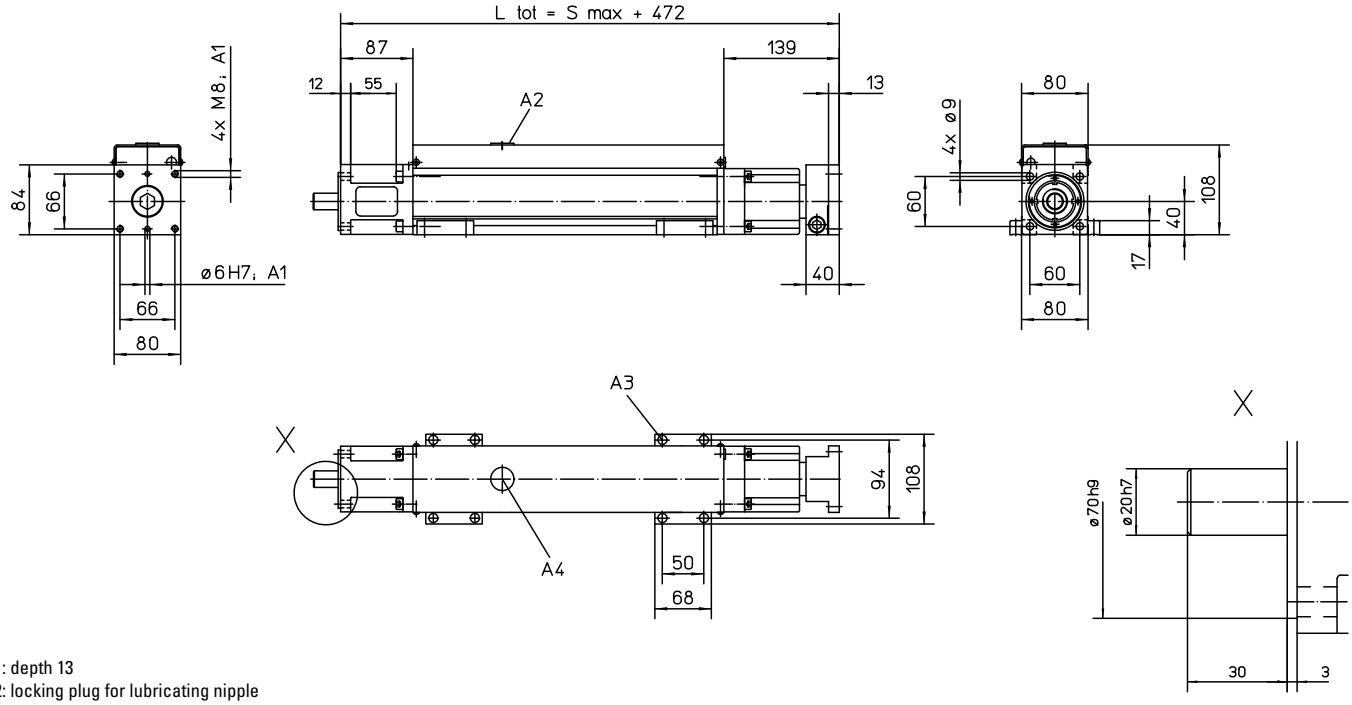

A1: depth 13
A2: locking plug for lubricating nipple
A3: socket cap screw ISO4762-M6×20 8.8
A4: tapered lubricating nipple to DIN71412 AM6 as standard feature

Maximum Rod Side Forces (Fy, Fz)

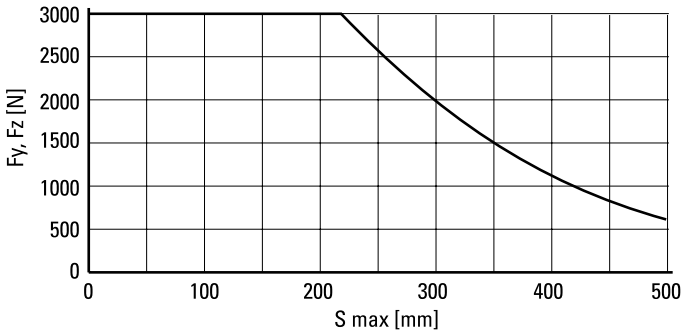

Deflection (f) of Rod due to Fy and Fz

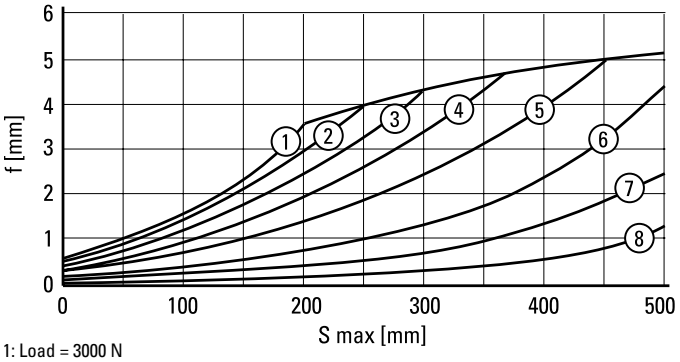

1: Load = 3000 N
2: Load = 2500 N
3: Load = 2000 N
4: Load = 1500 N
5: Load = 1000 N
6: Load = 500 N
7: Load = 250 N
8: Load = 125 N

Torsion (φ) of Rod due to Mx

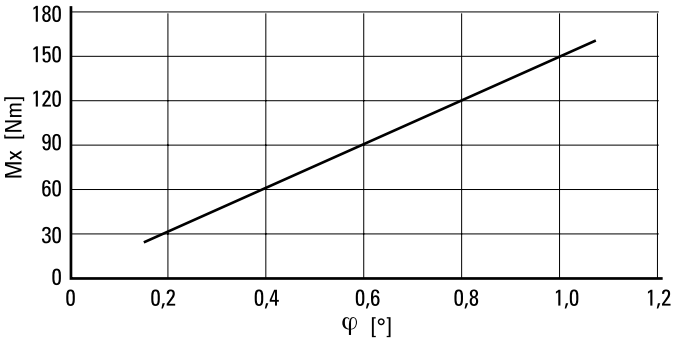

Accessories

Accessory Index

Mounting Kits.....page 132

- Mounting clamps 132
- Mounting clamps for multi axis systems 134
- Mounting plates for multi axis systems 135
- Adapter plates 135
- T-slot bolts and nuts..... 136

Cover and Protection Kits.....page 137

- Felt pad wipers type FA.....137
- Shaft protection cover.....137
- Protective bellows 138
- Protective shrouds.....139
- Environment protection type S1 and S2.....140

Motors, Gears and Transmission Kits.....page 141

- RediMount™™ Motor Mount System 141
- Bell house flanges for IEC motors 142
- Bell house flanges type MGK 143
- Worm gears type BS40 and TBS40.....144
- Belt gears type RT and BGM 148
- Planetary gears type Micron DT and DTR.....154
- Intermediate shafts type VWZ and DSP 156
- Brakes.....160

Electrical Feedback Devices.....page 161

- Limit switch brackets and limit switches.....161
- Inductive and magnetic sensors and sensor brackets.....162
- Encoders 165
- Limit switch kits type ES.....166
- Sensor rails and kits type ENT, ENF and ENK.....168
- Encoder kits type ADG.....170

Non-driven Linear Motion Systems.....page 172

- WH series non-driven units.....172
- WM series non-driven units.....174
- M series non-driven units.....177

Accessories

Mounting Kits

Mounting Clamps Type N1 and N2 (single clamp)[1]

Unit type	N1	N2	A	B	C	D	øE	F	øG	H	Screws	Ms [Nm]
WH40	890 885 0001	–	54	16	9,5	40	10	5,7	5,5	7	ISO4762-8.8	5,4
WH50	890 885 0001	–	54	16	9,5	40	10	5,7	5,5	7	ISO4762-8.8	5,4
WH80 / WB60	890 190 02	–	68	17,5	17	50	11	6,5	6,6	7	ISO4762-8.8	9
WH120	890 192 13	–	80	25	18	50	15	8,5	9	10	ISO4762-8.8	20
WM40 / WB40	890 885 001	–	54	16	9,5	40	10	5,7	5,5	7	ISO4762-8.8	5,4
WM60 / WV60 / WZ60	890 190 02	–	68	17,5	17	50	11	6,5	6,6	7	ISO4762-8.8	9
WM80 / WV80 / WZ80	890 190 02	–	68	17,5	17	50	11	6,5	6,6	7	ISO4762-8.8	9
WM60Z / WM80Z	890 190 02	–	68	17,5	17	50	11	6,5	6,6	7	ISO4762-8.8	9
WM120 / WV120	890 192 13	–	80	25	18	50	15	8,5	9	10	ISO4762-8.8	20
MLS60	890 190 02	890 192 26	68/120	17,5	17	50	11	6,5	6,6	7	ISO4762-8.8	9
MLS80	890 192 13	890 192 31	80/200	25	18	50	15	8,5	9	10	ISO4762-8.8	20

[1] Screws included in the shipment of above clamps

Ms = tightening torque of screws

N1

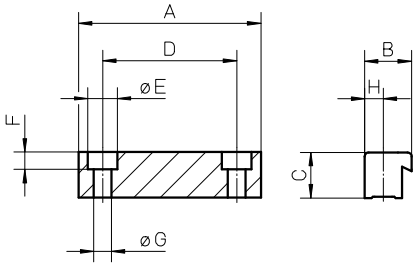

N2

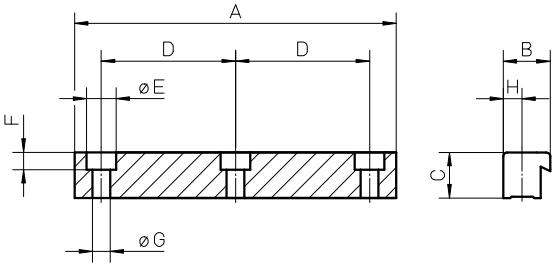

Mounting Clamps Type M1 and M2 (single clamp)[1]

Unit type	M1	M2	A	B	C	D	øE	F	øG	H	Screws	Ms [Nm]
M50 [1]	D312 248	–	25	30	20	–	–	–	6,5	14	ISO4762-8.8	9,4
M55 [1]	D313 403	D313 402	25/56	25,5	10,7	41	9,5	5,3	5,5	10,2	ISO4762-8.8	5,5
M75 [1]	D312 747	D312 748	30/75	28,5	15	60	14	8,5	8,5	11	ISO4762-8.8	23
M100 [1]	D312 339	D312 334	45/92	46,5	22	60	17	10,5	10,5	20	ISO4762-8.8	45

[1] No screws included in the shipment of above clamps

Ms = tightening torque of screws

M1

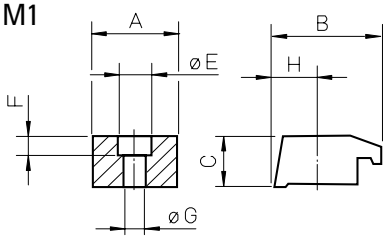

M2

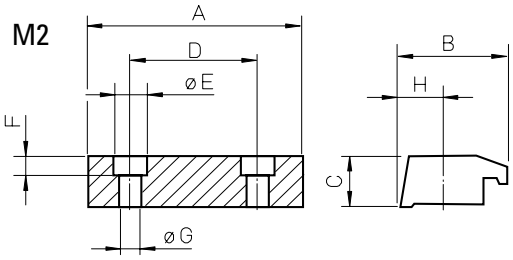

Accessories

Mounting Kits

Mounting Clamps Type M2 with Plate[1]

Unit type	p/n	A	B	C	D	E	øF	øG	H
M50	D312 117	7	20	105	35	30	6,5	11	–
M55	D313 474	8,5	15	100	44	70	8,5	14	44
M75	D312 718	8,5	15	134	44	80	8,5	14	44
M100	D312 317	8,5	20	190	44	100	8,5	14	44

[1] two mounting clamps of version M2 (see page 132) and screws to connect these to the plate are included in shipment

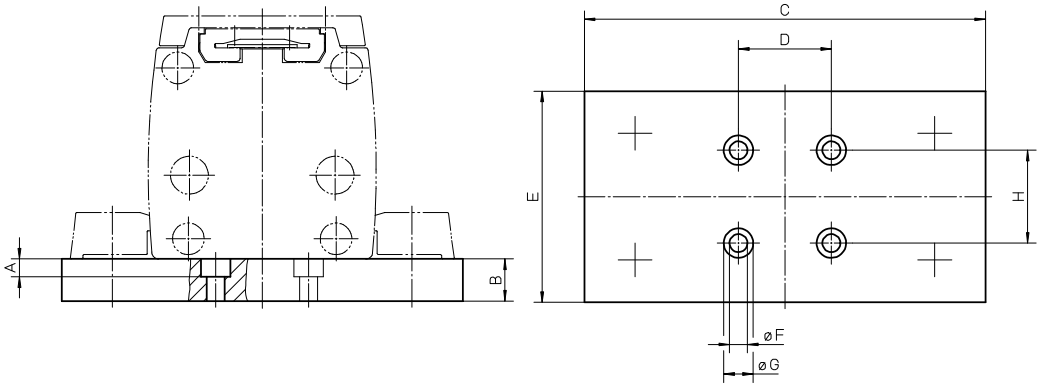

Accessories

Mounting Kits

Mounting Clamps Type N1 for Multi Axis Systems[1]

Unit type X-axis	Unit type Y-axis	Clamps	A	B	C	D	øE	F	øG	H
WM40 / WH40	WM40 / WH40	on request	–	–	–	–	–	–	–	–
WM60	WM60	890 191 94	58	17,5	17	40	11	6,5	6,6	7

[1] all necessary screws are included in the shipment

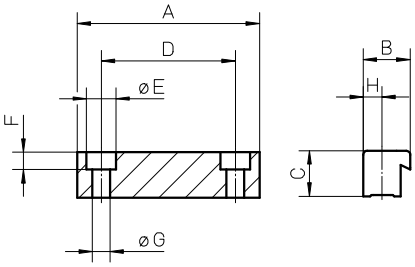

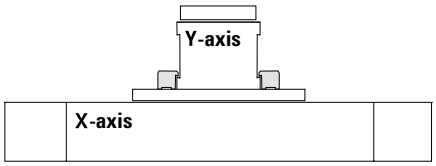

Mounting Clamps Type M2 for Multi Axis Systems[1]

Unit type X-axis	Unit type Y-axis	p/n	A	B	C	D	øE	F	øG	H
M55	M55	D313 424	56	25,5	10,7	41	9,5	5,3	5,5	10,2
M75	M75	D312 719	75	28,5	15	60	14	8,5	8,5	11
M100	M100	D312 304	92	46,5	22	60	17	10,5	10,5	20

Mounting Clamps Type M2 with Plate for Multi Axis Systems[1]

Unit type X-axis	Unit type Y-axis	p/n	A	B	C	D	E	øF	øG	H
M55	M75	D313 470	5,5	15	134	76	80	5,5	9,5	41
M75	M55	D313 060	8,5	15	134	106	80	8,5	14	60
M75	M100	D313 062	8,5	20	190	106	100	8,5	14	60
M100	M75	D313 292	10,5	20	190	142	100	10,5	17	60

[1] all necessary screws are included in the shipment

Clamps

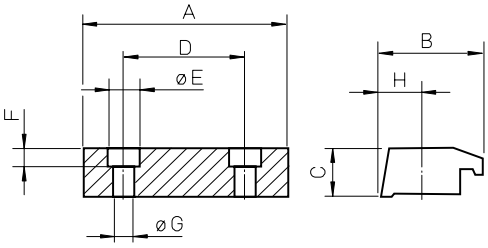

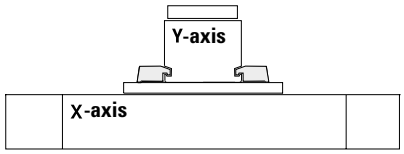

Clamps
with Plate

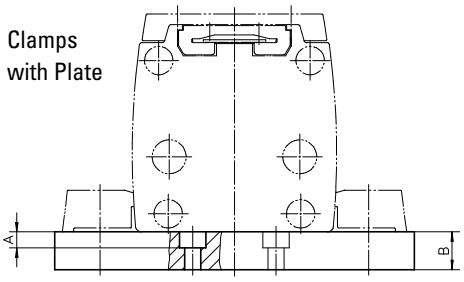

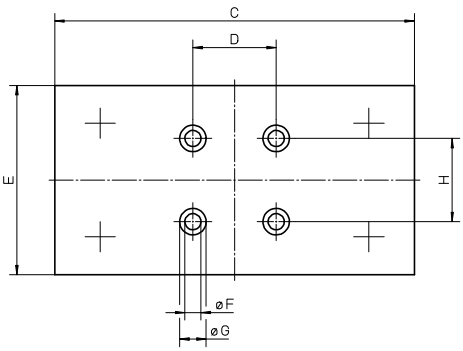

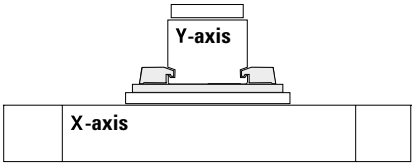

The clamps + plate consist of two clamps type M2, one plate and necessary screws.

Accessories

Mounting Kits

Mounting Plates for Multi Axis Systems

Unit type X-axis	Unit type Y-axis	p/n	A	B	C	D	E	F	G	H	J	K	L
MS33	MS33	MSXYP33-33	30	30	6	9	6	60	120	30	100	M5 x 0,8 - 6H	12,7
MS33	MS25	MSXYP33-25	30	30	5,5	9	6	60	60	42	42	M3 x 0,5 - 6H	12,7
2HB10	MS25	2HXYP10-MS25	70	70	5,5	9	6	100	100	42	42	M3 x 0,5 - 6H	12,7
2HB10	MS33	2HXYP10-MS33	70	70	6	9	6	100	120	30	100	M5 x 0,8 - 6H	12,7
2HB10	2HB10	2HXYP10-10	70	70	5,5	9	6	100	100	35	75	M5 x 0,8 - 6H	12,7
2HB20	2HB10	2HXYP20-10	145	145	10,5	16,5	11	200	200	35	75	M5 x 0,8 - 6H	22
2HB20	2HB20	2HXYP20-10	145	145	10,5	16,5	11	200	200	85	120	M8 x 1,25 - 6H	22

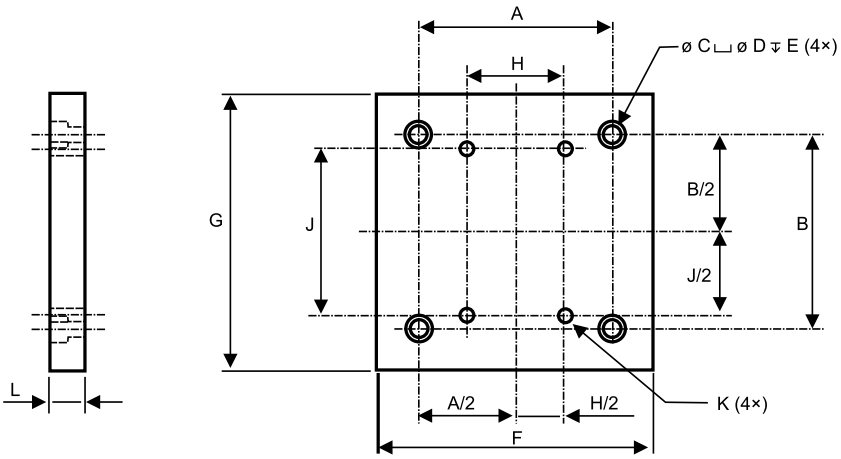

Combinations for other units are available. Plates to connect X and Z axes are also available for the Microstage units size MS25 and MS33. Contact customer support for details.

Adapter Plates

Unit type	I	I I	A	B	C	D	E	øF	G
M55	D313 422	D313 423	40	60	20	38	25,5	6,5	37
M75	D312 746	–	40	–	26	-	45	6,5	51
M75	–	D312 745	–	60	-	39	45	7,5	51
M100	D312 338	–	40	–	26	-	69	6,5	62
M100	–	D312 337	–	60	-	39	69	7,5	62

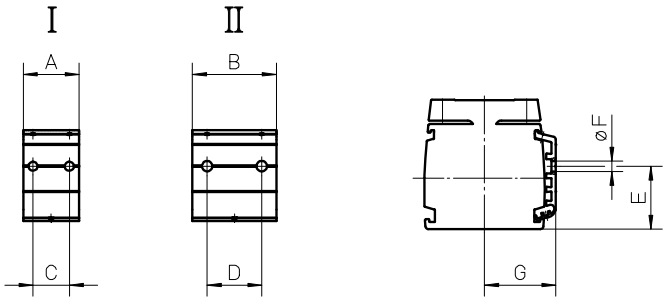

Adapter plates are fitted in the grooves along the profile and can be used to attach sensors, switches, cable ducts etc. to the unit.

Accessories

Mounting Kits

T-slot Bolts

Unit type	p/n	øD	H
M50	D312 221	M5	14
Z2	D800 089	M10	28
Z3	D800 089	M10	28

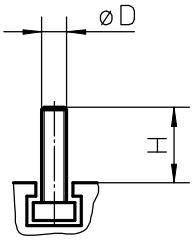

T-slot Nuts

Unit type	p/n	A	B	C	D	øE	F
ZB	D900 151	18	11	1,5	6,3	M6	25
ZB	D900 150	18	11	1,5	6,3	M8	25
MLS60	920 303 0037	16	8	4	6	M6	16
MLS80	920 303 0039	19,5	10	5,5	10,5	M8	20
WH120	911 044 19	15	10	6	12	M8	15
WM120	911 044 19	15	10	6	12	M8	15
2RB12, 2HB10, 2HB20	TNUT-01-M3	7	4	1,75	3	M3	9
2RB16, 2HB10	TNUT-02-M4	9,5	5,5	2,25	4	M4	12
2RB12	TNUT-03-M4	12	7	2,5	5	M4	15
2RB16, 2HB20	TNUT-04-M4	16,5	7,9	4,8	6	M4	16
2RB16, 2HB20	TNUT-04-M5	16,5	7,9	4,8	6	M5	16
2RB16, 2HB20	TNUT-04-M6	16,5	7,9	4,8	6	M6	16

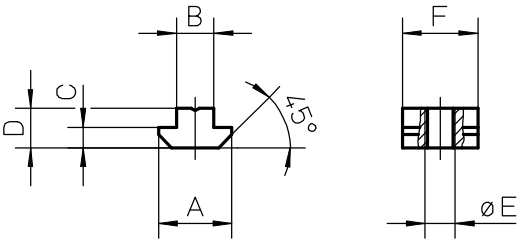

Accessories

Cover and Protection Kits

FA Felt Pad Wiper

Unit type	Number of carriages on the unit	p/n	X
WH50	1	890 885 0064	6
WH50	2	2 × 890 885 0064	6
WH80	1	890 890 0069	7
WH80	2	2 × 890 890 0069	7
WH120	1	890 895 0058	8
WH120	2	2 × 890 895 0058	8
WHZ50	1	890 885 0064	6
WHZ50	2	2 × 890 885 0064	6
WHZ80	1	890 890 0069	7
WHZ80	2	2 × 890 890 0069	7

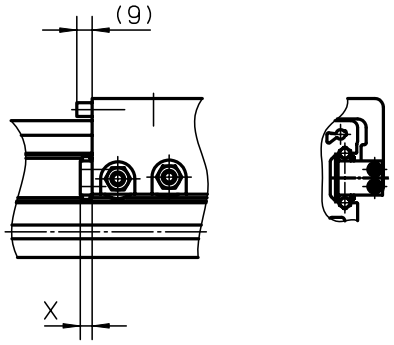

The felt pad wipers remove dust and dirt from the guides and are located on the carriage(s). They may increase the driving torque slightly but do not reduce the stroke of the unit. The felt pad wipers comes mounted from factory as standard on all WH and WHZ units but can also be ordered here as a spare part.

Shaft Protection Cover

Unit type	p/n	A	B
M50	D312 201	126	35
M55	D312 201	151	35
M75	D700 178	198	45
M100	D700 178	202	45

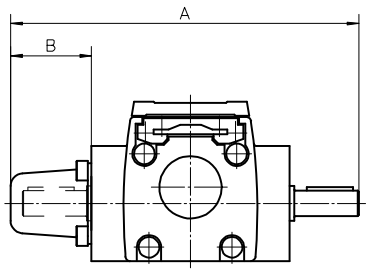

The shaft protection cover is used to cover shafts which are not being used. The covers are fitted by the customer.

Accessories

Cover and Protection Kits

Protective Bellows type 2D

Unit type	p/n	H	H1	B
2DB08	BEL-2DB-08	48	34	130
2DB12	BEL-2D-12	61	36,5	152,5
2DB12	BEL-2D-16	73	43	190,5

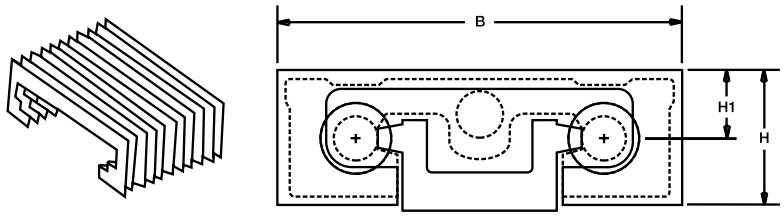

Bellows protect the unit from dirt and dust. Note that the bellows option reduces the available stroke of the unit by 28%. Bellows can be ordered and mounted at the factory - see ordering key. Bellows can also be ordered separately and fitted by the customer. In that case, order two pieces of bellows where the length of each bellows piece = stroke length of the unit × 0.86.

Protective Bellows type 2H

Unit type	p/n	B	B2	H	H1	H2	H4
2HB10	BEL-2H-10	103	81	26	11	10	0
2HB20	BEL-2H-20	199	167	48	30	15	5

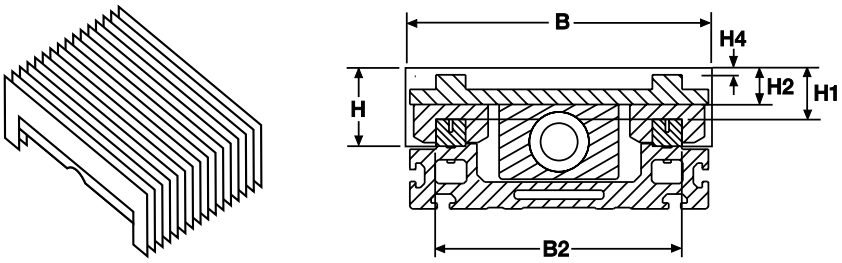

Bellows protect the unit from dirt and dust. Note that the bellows option reduces the available stroke of the unit by 28%. Bellows can be ordered and mounted at the factory - see ordering key. Bellows can also be ordered separately and fitted by the customer. In that case, order two pieces of bellows where the length of each bellows piece = stroke length of the unit × 0.86.

Protective Bellows type 2R

Unit type	p/n	B	B2	H	H1	H2	H3	H4
2RB12	BEL-2R-12	128	75	48	37	29	15	12
2RB16	BEL-2R-16	158	95	52	43	30	15	10

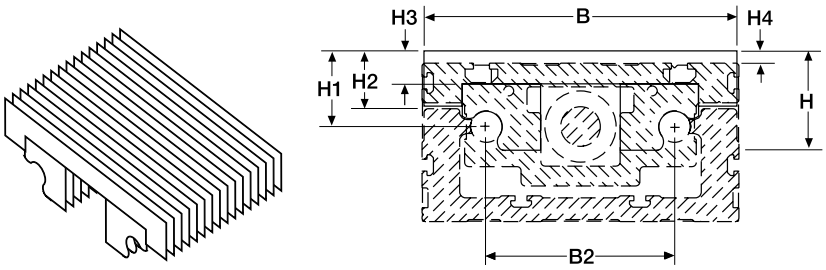

Bellows protect the unit from dirt and dust. Note that the bellows option reduces the available stroke of the unit by 28%. Bellows can be ordered and mounted at the factory - see ordering key. Bellows can also be ordered separately and fitted by the customer. In that case, order two pieces of bellows where the length of each bellows piece = stroke length of the unit × 0.86.

Accessories

Cover and Protection Kits

Protective Shrouds

Unit type	
2HB10	see ordering key of the unit for order or www.linearmotioneering.com
2HB20	see ordering key of the unit for order or www.linearmotioneering.com

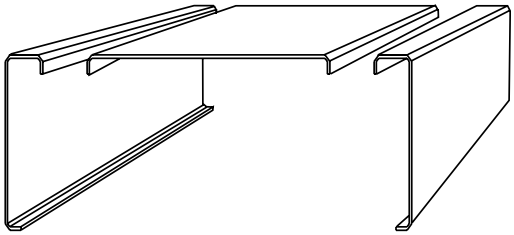

The protective shrouds are made of metal and protect the drive mechanism of the unit from dust and dirt but leave the guides unprotected. Shrouds do not reduce the stroke of the unit but they will add 4 mm to the width of the unit. Shrouds are ordered mounted from factory and are stated in the ordering key of the unit.

Accessories

Cover and Protection Kits

Environment Protection Option Type S1 and S2, compatibility table

Unit type	Drive type	Guide type	S1	S2	Ordering
M55	ball screw	slide	•		see ordering key of the unit for order
M55	belt drive	slide	•	•	see ordering key of the unit for order
		ball	•		see ordering key of the unit for order
M75	ball screw	slide	•		see ordering key of the unit for order
M75	belt drive	slide	•	•	see ordering key of the unit for order
		ball	•		see ordering key of the unit for order
M100	ball screw	slide	•		see ordering key of the unit for order
M100	belt drive	slide	•	•	see ordering key of the unit for order
		ball	•		see ordering key of the unit for order
WM60 / WM80 / WM120	ball screw	ball	•		see ordering key of the unit for order
WV60 / WV80 / WV120	ball screw	no guide	•		see ordering key of the unit for order
WH50 / WH80 / WH120	belt drive	wheel	•	•	see ordering key of the unit for order
WHZ50 / WHZ80	belt drive	wheel	•		see ordering key of the unit for order

The S1 and S2 environment protection options can be ordered for some units. All performance data and the life expectancy are the same as for standard units except for WH and WHZ units (contact customer service for more information). S1 can be ordered for both ball screw and belt driven units with ball, slide or wheel guides while S2 only is possible for belt driven units with slide or wheel guides. Never use chemical agents and/or cleaning detergents before contacting your local Thomson customer service for advice.

S1 - Wash down protection
Typical places where S1 is used are in slaughter houses, dairy plants, food plants or in any other light wash down application.

S2 - Enhanced wash down protection
Typical places where S2 is used are in moderately wet areas such as in paper mills, galvanizing equipment, food industries or in any other harsh environment application where enhanced wash down capabilities are required.

Environment Protection Options Type S1 and S2, technical specification

Item	S1	S2
External screws, bolts and nuts	stainless material class A2 or better	stainless material class A4 or better
Internal screws, bolts and nuts	standard material	stainless material class A2 or better
Drive shaft, ball screw driven units	standard material	-
Drive shaft, belt driven units	stainless material SS2333 or better	stainless material SS2343 or better
Tension wheel shaft	standard material	stainless material SS2333 or better
Bearings type	standard bearings	2RS
Bearing sealings, belt driven units	radial sealings	radial sealings
Surface treatment of machined extruded aluminum parts	none	anodizing
Surface treatment of machined casted aluminum parts	none	anodizing
Cam rollers and idler shafting (WH and WHZ units)	standard material	stainless material
Belt retainer (WH units)	none	stainless material

Accessories

Motors, Gears and Transmission Kits

RediMount™ Motor Mount System, NEMA compatibility table

NEMA size	NEMA 17	NEMA 23	NEMA 34	NEMA 42
Motor code *	**505**	**001**	**002**	**003**
MS25	x	x		
MS33	x	x		
2HB10		x	x	
2HB20			x	x
2RB12		x	x	
2RB16		x	x	
2DB08	x (code 523)	x		
2DB12		x	x	
2DB16		x	x	

* See ordering keys for details.

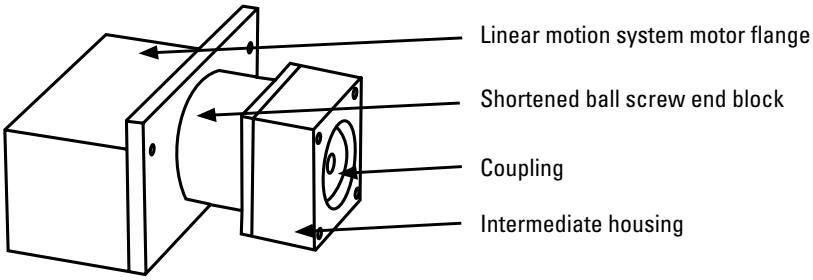

The standard NEMA motor mount sizes are listed above for reference. The Thomson RediMount™ System allows the linear units to be mounted to a wide variety of motor manufacturers and sizes. Many of these combinations can be found at www.linearmotioneering.com. Contact customer support for other motor sizes and their corresponding motor code.

Accessories

Motors, Gears and Transmission Kits

Bell House Flanges for IEC Motors

Unit type	IEC63 B14	A	IEC71 B14	A	IEC80 B14	A	IEC90 B14	A	IEC100/112 B14	A
M50	D390 820	64	D390 821	71	–	–	–	–	–	–
M55	D390 820	64	D390 821	71	–	–	–	–	–	–
M75	–	–	D390 823	83	D390 912	101	D390 916	101	–	–
M100 (MG10K)	–	–	D390 823	83	D390 913	101	D390 917	101	–	–
M100 (MG10B)	–	–	D390 823	83	D390 912	101	D390 916	101	–	–

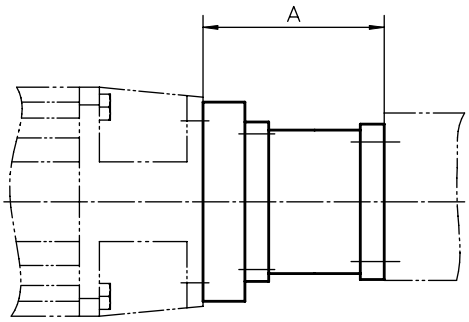

The bell house flange includes a matching coupling. Note! Keep in mind that heavy motors will need extra support in order not to break the flange or gear due to the load torque created.

Accessories

Motors, Gears and Transmission Kits

MGK Bell House Flanges for AKM Servo Motors

Unit type	AKM3 • D-AN	A	AKM4 • D-AN	A	AKM5 • D-AN	A	AKM6 • D-AN	A	AKM7 • D-AN	A
WM40	891 092 1264	71	–	–	–	–	–	–	–	–
WB40	891 092 1263	63	–	–	–	–	–	–	–	–
WB60	891 092 1265	75	–	–	–	–	–	–	–	–
WM60 / WV60 / WZ60	891 092 1109	79	891 092 1262	89	891 092 1261	103	–	–	–	–
WM80 / WV80 / WZ80	D321 759	80	D321 404	91	891 092 1259	101	891 092 1258	117	–	–
WM120 / WV120	–	–	–	–	891 092 0143	113	891 092 1257	121	D321 281	143
MLSM60	–	–	891 092 0909	88	891 092 1260	98	–	–	–	–
MLSM80	–	–	–	–	–	–	891 092 1256	111	891 092 1254	133
M55 (MG06K)	D390 930	73	D389 939	92	–	–	–	–	–	–
M75 (MG07K)	D390 969	83	D390 926	93	D390 909	107	–	–	–	–
M75 (MG07B)	D390 969	83	D390 926	93	D390 909	107	–	–	–	–
M100 (MG10K)	D390 969	83	D390 927	93	D390 910	107	–	–	–	–
M100 (MG10B)	D390 969	83	D390 926	93	D390 909	107	–	–	–	–

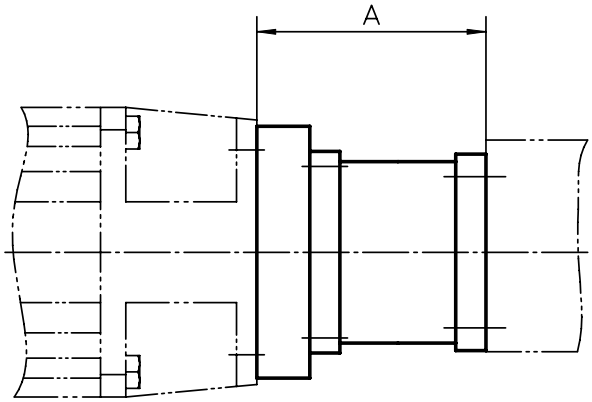

The bell house flange includes a matching coupling. Flanges for other units or motor sizes available on request, contact customer service. Note! Keep in mind that heavy motors will need extra support in order not to break the flange or gear due to the load torque created.

Accessories

Motors, Gears and Transmission Kits

BS40 Worm Gears, dimensions

Gear	A	B	C	D	E	F
BS40	54	40	46	10	100	92

The worm gear includes the gear, the bell house and a matching coupling.

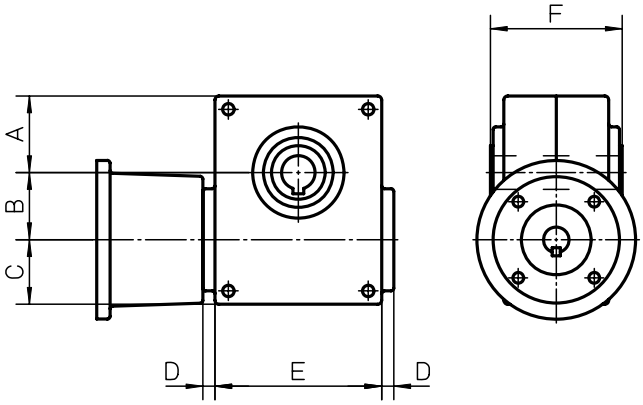

BS40 Worm Gears, compatibility table

Unit	BS40	IEC71B14	IEC80B14	IEC90B14	A	L
Z2 (MGZ2K32)	•	•			17	58
Z2 (MGZ2K32)	•		•		17	68

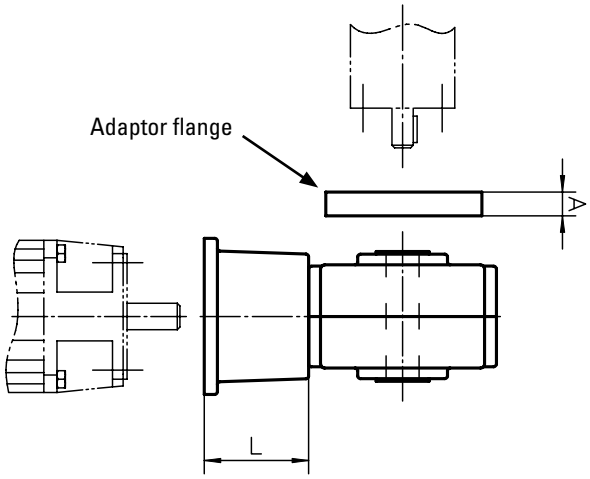

To be able to install the gear to the unit an adaptor flange must be used between the gear and the unit. The adaptor flange is ordered separately.

Accessories

Motors, Gears and Transmission Kits

BS40 Worm Gears, ordering key

	1	2	3
Example	BS40	-10	-71

1. Type and size of worm gear	2. Gear ratio	6. Motor size
BS40 = BS40 worm gear	-3 = 3:1 -5,5 = 5,5:1 -7,5 = 7,5:1 -10 = 10:1 -15 = 15:1 -20 = 20:1 -24 = 24:1 -30 = 30:1 -40 = 40:1 -48 = 48:1 -60 = 60:1	no code = without bell house and coupling -71 = IEC71B14 -80 = IEC80B14

Adaptor flanges for BS40 Worm Gears, part numbers

Unit	p/n
Z2 (MGZ2K32)	D606 250

Accessories

Motors, Gears and Transmission Kits

TBS40 Worm Gears, dimensions

Gear	A	B	C	D	E	F	øG	H	øI	J	K
TBS40	54	40	46	10	100	125	14j6	45	65	M8 (4×)	25

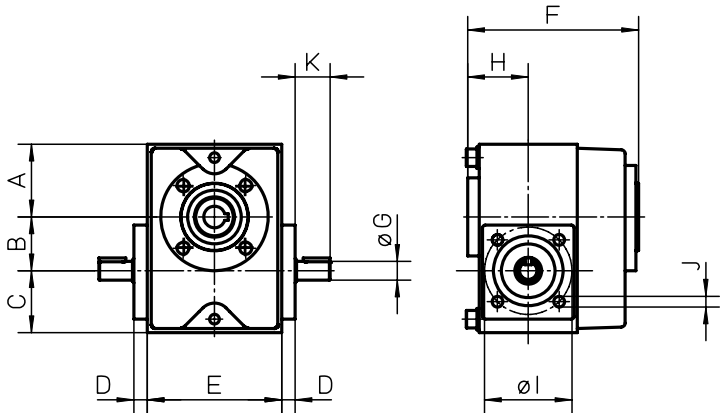

The worm gear is installed directly to the unit and requires no intermediate coupling between the two.

TBS40 Worm Gears, compatibility table

Unit	TBS40	IEC71B14	IEC80B14	A	L
Z2 (MGZ2K25)	•	•		32	58
Z2 (MGZ2K25)	•		•	32	68
Z3 (MGZ3K25)	•	•		32	58
Z3 (MGZ3K25)	•		•	32	68
M75	•	•		32	58
M75	•		•	32	68
M100	•	•		32	58
M100	•		•	32	68

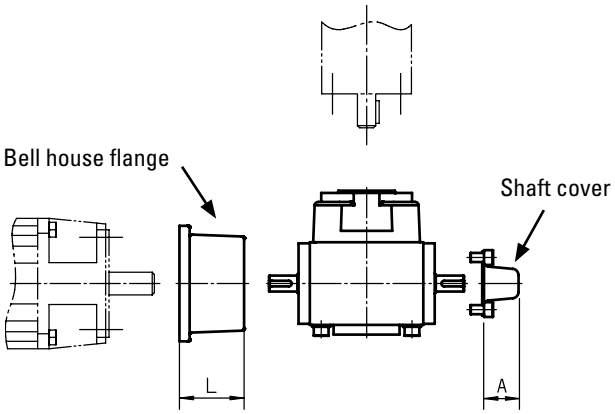

To be able to install the gear to the motor a bell house flange must be used between the gear and the motor. The bell house flange, which includes a matching coupling, is ordered separately. A shaft cover can be ordered to cover the second primary shaft on the gear in case it is not being used.

Accessories

Motors, Gears and Transmission Kits

TBS40 Worm Gears, ordering key

	1	2	3
Example	TBS40	-3	-216

1. Type and size of worm gear	2. Gear ratio	3. Fixed code
TBS40 = TBS40 worm gear	-3 = 3:1 -5,5 = 5,5:1 -7,5 = 7,5:1 -10 = 10:1 -15 = 15:1 -20 = 20:1 -24 = 24:1 -30 = 30:1 -40 = 40:1 -48 = 48:1 -60 = 60:1	-216

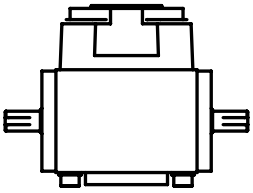

Bell house flanges for TBS40 Worm Gears, part numbers

Motor size	p/n
IEC71B14	D701 011
IEC80B14	D701 015

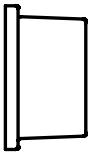

Shaft Cover for TBS40 Worm Gears, part numbers

Gear type	p/n
TBS40	D701 020

Accessories

Motors, Gears and Transmission Kits

RT Belt Gears, dimensions

Gear	A	B	C	D
RT40	110	30	176	68
RT60	175	74	345	170
RT80	175	74	345	170

RT40

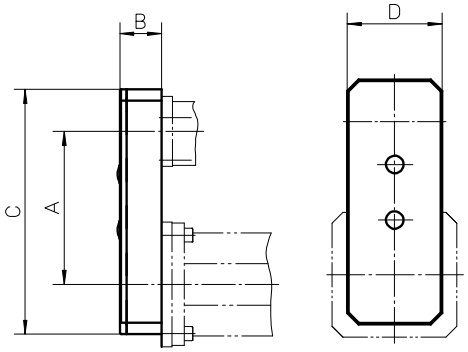

RT60/80

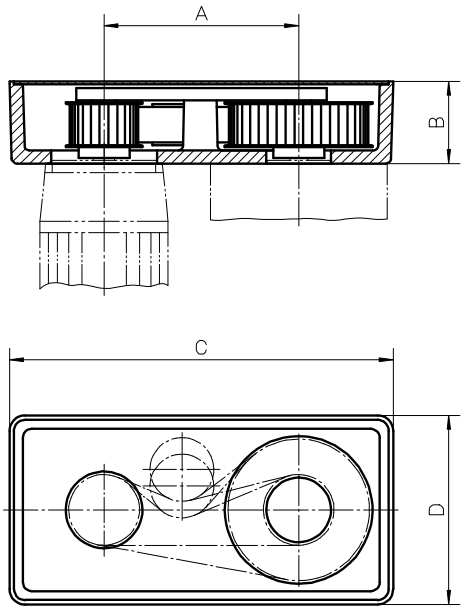

RT Belt Gears, data

Gear	i	nmax [rpm]	Mmax [Nm]	M idle [Nm]	η	J [kgm²]	Weight [kg}
RT40	1:1	3000	1,75	0,3	0,80	0,000025	0,62
RT60	1:1	3000	15	0,7	0,85	0,000438	5,6
RT60	2:1	3000	15	0,7	0,85	0,001011	7,1
RT80	1:1	3000	30	0,7	0,85	0,000465	5,5
RT80	2:1	3000	30	0,7	0,85	0,001038	7

i = gear ratio
nmax = max. input speed
Mmax = max. input torque
M idle = idle torque
η = efficiency factor
J = inertia

Accessories

Motors, Gears and Transmission Kits

RT Belt Gears, compatibility table

Gear	WH40 / WM40	WM60 / WV60 / WZ60 / MLSM60D	WH80 / WM80 / WV80 / WM120 / WV120 / MLSM60D / MLSM80D
RT40	•		
RT60		•	
RT80			•

RT Belt Gears, ordering key

	1	2	3	4	5
Example	RT80	-2	-• • •	-P-N	-05

1. Type and size of belt gear
RT40 = RT belt gear size 40
RT60 = RT belt gear size 60
RT80 = RT belt gear size 80

2. Gear ratio
-1 = 1:1
-2 = 2:1

3. Motor code
- • • • = alphanumeric motor code (e.g. -AK5). There are several motors that fit each gear and the list of suitable motors is continuously being updated. Please contact customer support for help to see which motors are currently are on the list or if your preferred motor can be added to the list.

4. Type of mounting
-P-M = gear supplied mounted to the unit
-P-N = gear supplied unmounted

5. Compatible unit type
-01 = WH40
-02 = WH50
-03 = WH80
-04 = WH120
-05 = WM40
-06 = WM60
-07 = WM80
-08 = WM120
-09 = WV60
-10 = WV80
-11 = WV120
-12 = WHZ50
-13 = WHZ80
-14 = WZ60
-15 = WZ80
-16 = MLSH60Z
-18 = MLSM80Z
-19 = MLSM60D
-20 = MLSM80D

Accessories

Motors, Gears and Transmission Kits

BGM Belt Gears, dimensions

Gear	A	B	C	D	øE	F	G	H	I	J
BGM09	118,7	52	255	140	20 H9	95	115	60	–	–
BGM41	155,2	70	305	165	25 H9	122	147	70	–	–
BGM81	200	73	399	224	30 H9	134	159	90	90H14	170

The belt gear comes in parts and is assembled to the unit and motor by the customer.

BGM09/41/81 - WITHOUT CLEVIS OPTION

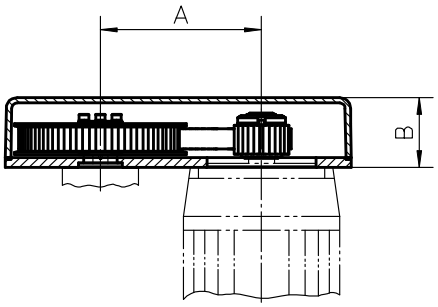

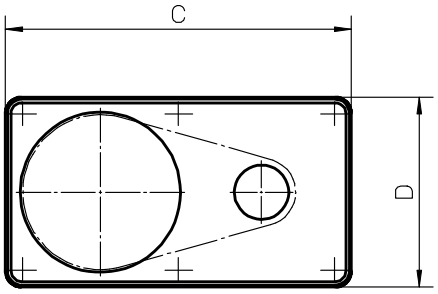

BGM09/41/81 - WITH CLEVIS OPTION TYPE S

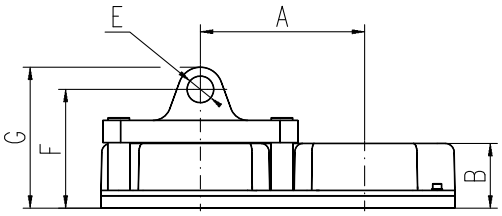

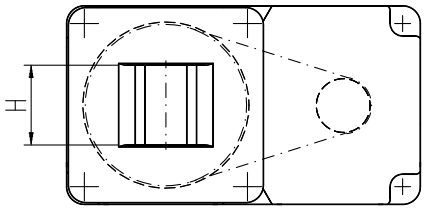

BGM81 - WITH CLEVIS OPTION TYPE R

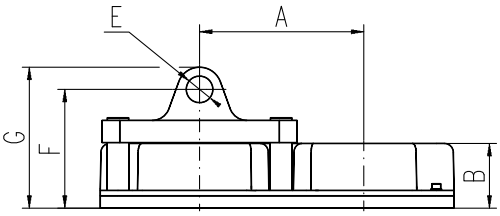

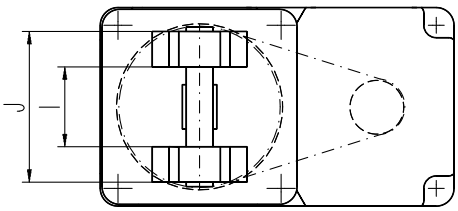

Accessories

Motors, Gears and Transmission Kits

BGM Belt Gears, data

Gear	i	nmax [rpm]	Mmax [Nm]	η	J [kgm²]	Weight [kg}
BGM09	1,04:1	4000	4,1	0,85	0,000102	2
BGM09	1,85:1	4000	4,1	0,85	0,000112	2,1
BGM09	2,85:1	4000	4,1	0,85	0,000213	2,5
BGM41	1:1	4000	22,0	0,85	0,000438	3,4
BGM41	2:1	4000	15,8	0,85	0,000342	3,7
BGM41	3:1	4000	16,7	0,85	0,000583	4,6
BGM81	1:1	4000	29,0	0,85	0,000836	12,1
BGM81	2,25:1	4000	32,3	0,85	0,001051	12,9
BGM81	3,13:1	4000	30,3	0,85	0,001439	14

i = gear ratio
nmax = max. input speed
Mmax = max. input torque
η = efficiency factor
J = inertia

BGM Belt Gears, compatibility table

Gear	WM/V/Z60	WM/V80	WM/V120	MLSM80D	WB60	M50	M55	M75	M100	Z2
BGM09	•				•	•	•	•		
BGM41	•	•						•	•	•
BGM81			•	•						

BGM Belt Gears, ordering keys

See next page for ordering keys.

Accessories

Motors, Gears and Transmission Kits

BGM 09 Belt Gears, ordering key

	1	2	3	4	5	6	7	8
Example	BGM09	-2	-CC	063	P	050	X	+XX

1. Type and size of belt gear
BGM09 = BGM belt gear size 09

2. Gear ratio
-1 = 1,04:1
-2 = 1,85:1
-3 = 2,85:1

3. Type of couplings
-CC = conical couplings

4. Motor size[1]
063 = IEC 63 B14
071 = IEC 71 B14
S80 = servo motor size 80
AK4 = servo motor type AKM 4

5. Type of mounting
P = standard

6. Compatible unit type
W06 = WM60, WV60, WZ60
WB6 = WB60
050 = M50
060 = M55
070 = M75

7. Clevis option
X = no clevis option
S = clevis option type S

8. Protection
+XX = standard
+S1 = wash down protection

[1]This is only a selection of all motors that fit this gear. Please contact customer support to see if your preferred motor fits the gear.

BGM 41 Belt Gears, ordering key

	1	2	3	4	5	6	7	8
Example	BGM41	-1	-CC	071	P	070	X	+S1

1. Type and size of belt gear
BGM41 = BGM belt gear size 41

2. Gear ratio
-1 = 1:1
-2 = 2:1
-3 = 3:1

3. Type of couplings
-CC = conical couplings

4. Motor size[1]
071 = IEC 71 B14
080 = IEC 80 B14
S80 = servo motor size 80
S95 = servo motor size 95
AK5 = servo motor type AKM 5

5. Type of mounting
P = standard

6. Compatible unit type
W06 = WM60, WV60, WZ60
W08 = WM80, WV80
070 = M75
10B = M100 (MF/G10B)
10K = M100 (MF/G10K/C/D)

7. Clevis option
X = no clevis option
S = clevis option type S

8. Protection
+XX = standard
+S1 = wash down protection

[1]This is only a selection of all motors that fit this gear. Please contact customer support to see if your preferred motor fits the gear.

Accessories

Motors, Gears and Transmission Kits

BGM 81 Belt Gears, ordering key

	1	2	3	4	5	6	7	8
Example	BGM81	-1	-CC	090	P	M8D	X	+XX

1. Type and size of belt gear
BGM81 = BGM belt gear size 81

2. Gear ratio
-1 = 1:1
-2 = 2,25:1
-3 = 3,13:1

3. Type of couplings
-CC = conical couplings

4. Motor size[1]
090 = IEC 90 B14
100 = IEC 100/121 B14
A20 = servo motor size A200
AK6 = servo motor type AKM 6

5. Type of mounting
P = standard

6. Compatible unit type
W12 = WM120, WV120
M8D = MLSM80D

7. Clevis option
X = no clevis option
S = clevis option type S
R = clevis option type R

8. Protection
+XX = standard
+S1 = wash down protection

[1]This is only a selection of all motors that fit this gear. Please contact customer support to see if your preferred motor fits the gear.

Accessories

Motors, Gears and Transmission Kits

Micron DT, DTR Planetary Gears, compatibility and dimensions

Unit	Gear	i	□A	B	C	□D	E	Weight [kg]	Backlash [arc min]	Efficiency [%]
WH50	DT60-SS	3:1 - 10:1	89,7	60	–	–	–	1	8	90
	DT60-DS	15:1 - 100:1	106,9	60	–	–	–	1,2	9	85
	DTR60-SS	5:1 - 50:1	–	–	110,2	104,1	60	2,5	9	90
	DTR60-DS	60:1 - 500:1	–	–	127,3	104,1	60	2,7	9	85
WH80	DT90-SS	3:1 - 10:1	110,9	90	–	–	–	3	9	90
	DT90-DS	15:1 - 100:1	133,5	90	–	–	–	3,7	9	85
	DTR90-SS	5:1 - 50:1	–	–	145,4	138,2	90	4,8	9	90
	DTR90-DS	60:1 - 500:1	–	–	168,0	138,2	90	5,5	9	85
WH120	DT115-SS	3:1 - 10:1	136,4	110	–	–	–	12,7	8	90
	DT115-DS	15:1 - 100:1	167,4	110	–	–	–	16,2	9	85
	DTR115-SS	5:1 - 50:1	–	–	185,7	173,5	115	11	8	90
	DTR115-DS	60:1 - 500:1	–	–	216,7	173,5	115	12	9	85
WM60Z	DT60-SS	3:1 - 10:1	89,7	60	–	–	–	1	8	90
	DT60-DS	15:1 - 100:1	106,9	60	–	–	–	1,2	9	85
	DTR60-SS	5:1 - 50:1	–	–	110,2	104,1	60	2,5	9	90
	DTR60-DS	60:1 - 500:1	–	–	127,3	104,1	60	2,7	9	85
WM80Z	DT90-SS	3:1 - 10:1	110,9	90	–	–	–	3	9	90
	DT90-DS	15:1 - 100:1	133,5	90	–	–	–	3,7	9	85
	DTR90-SS	5:1 - 50:1	–	–	145,4	138,2	90	4,8	9	90
	DTR90-DS	60:1 - 500:1	–	–	168,0	138,2	90	5,5	9	85

Micron DT and DTR planetary gears comes mounted on the unit from factory.

i = gear ratio

DT

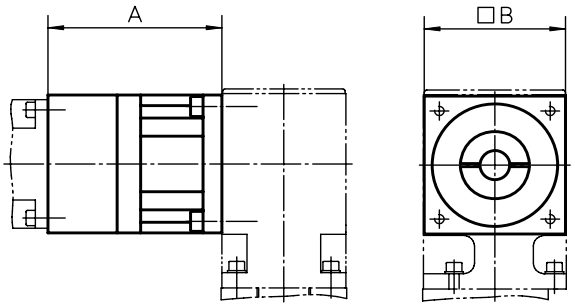

DTR

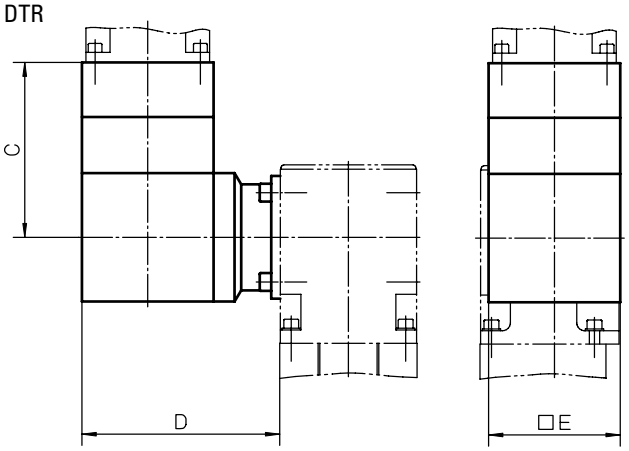

Left side

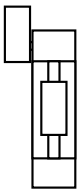

Right side

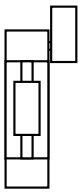

Position 1

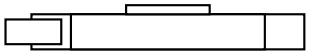

Position 2

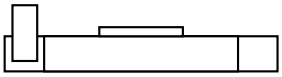

Position 3

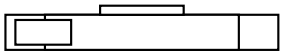

Position 4

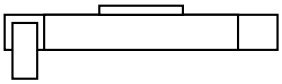

Accessories

Motors, Gears and Transmission Kits

Micron DT, DTR Planetary Gears, how to order

When ordering a DT or DTR planetary gear you need to state the size and type of gear, which side of the unit the gear shall be installed, the gear ratio and which motor that you wish to use. For DTR you also must state the preferred mounting position of the gear. With this information we can check if your choice of motor is possible or not and give you the correct ordering code for the gear.

Micron DT, ordering data

1. Size of planetary gear
DT60
DT90
DT115

2. Type of gear
-SS
-DS

3. Mounting side of the unit
Left
Right

4. Gear ratio
3:1 (only for -SS models)
5:1 (only for -SS models)
10:1 (only for -SS models)
15:1 (only for -DS models)
25:1 (only for -DS models)
30:1 (only for -DS models)
50:1 (only for -DS models)
100:1 (only for -DS models)

5. Motor
Specify your choice of motor.

Micron DTR, ordering data

1. Type and size of planetary gear
DTR60
DTR90
DTR115

2. Type of gear
-SS
-DS

3. Mounting position of the gear
Position 1
Position 2
Position 3
Position 4

4. Mounting side of the unit
Left
Right

5. Gear ratio
5:1 (only for -SS models)
6:1 (only for -SS models)
9:1 (only for -SS models)
10:1 (only for -SS models)
12:1 (only for -SS models)
15:1 (only for -SS models)
20:1 (only for -SS models)
25:1 (only for -SS models)
30:1 (only for -SS models)
40:1 (only for -SS models)
50:1 (only for -SS models)
60:1 (only for -DS models)
75:1 (only for -DS models)
90:1 (only for -DS models)
100:1 (only for -DS models)
120:1 (only for -DS models)
125:1 (only for -DS models)
150:1 (only for -DS models)
200:1 (only for -DS models)
250:1 (only for -DS models)
300:1 (only for -DS models)
400:1 (only for -DS models)
500:1 (only for -DS models)

6. Motor
Specify your choice of motor.

Accessories

Motors, Gears and Transmission Kits

VWZ Intermediate Shafts, dimensions

Shaft	øA	B	C	D	øE	F min.	G
VWZ-30	32	15	1,5	34	30	99	M4
VWZ-40	42	17	1,5	46	40	133	M5
VWZ-60	56	30	2	63	60	177	M6
VWZ-60V	67	35	2	73	60	205	M8
VWZ-80	82	40	2	84	80	249	M10
VWZ-100	102	50	2	97	100	283	M12

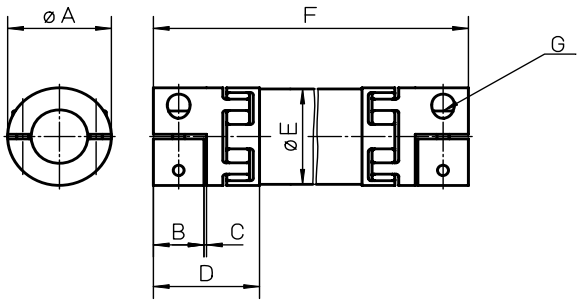

The VWZ intermediate shafts can be installed in two ways. Either directly to belt driven units (I) or to screw driven units using KRG bevel gears (II) of type VL0, VL1 or VL2. The intermediate shaft includes tube and couplings.

I

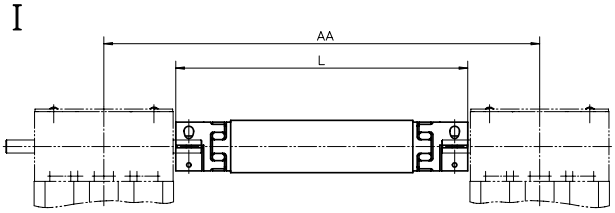

II

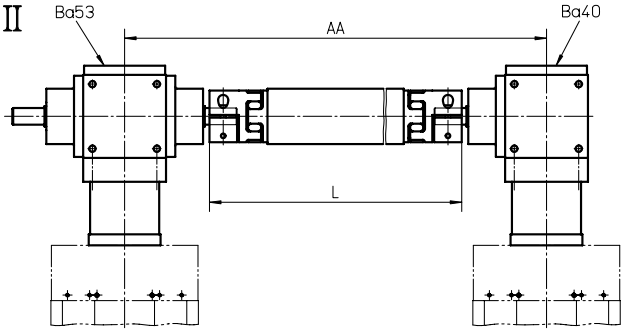

Critical Speed of Shaft

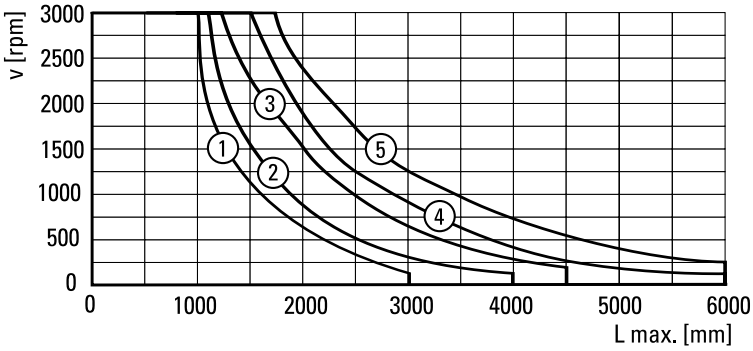

1: VWZ-30
2: VWZ-40
3: VWZ-60 and VWZ-60V
4: VWZ-80
5: VWZ-100

VWZ Intermediate Shafts, data

Shaft	Mmax [Nm]	Gs [kg/m]	Gc [kg]	Js [kgm²/m]	Jc [kgm²]	Ms [Nm]
VWZ-30	4,8	0,58	0,14	0,00011	0,00001	4
VWZ-40	6,4	0,76	0,36	0,00020	0,00008	8
VWZ-60	22,7	0,97	0,94	0,00080	0,00024	15
VWZ-60V	60,6	0,97	1,42	0,00080	0,00046	35
VWZ-80	122,7	2,00	2,98	0,00300	0,00240	70
VWZ-100	169,7	2,47	4,62	0,00580	0,00600	120

Mmax = max. shaft torque
Gs = weight of shaft
Gc = weight of coupling
Js = inertia of shaft
Jc = inertia of coupling
Ms = tightening torque

Accessories

Motors, Gears and Transmission Kits

VWZ Intermediate Shafts, compatibility table

Unit	I	I I	VWZ-30	VWZ-40	VWZ-60	VWZ-60V	VWZ-80	VWZ-100	AA [mm]
WH40	•			•					AA = L + 56
WH50 / WHZ50	•				•				AA = L + 54
WM60Z	•				•				AA = L + 64
WH80 / WHZ80	•					•			AA = L + 84
WH120	•							•	AA = L + 124
WM80Z	•					•			AA = L + 84
MLSH60Z	•					•			AA = L + 164
WB40 / WM40		VL0	•						AA = L + 170
WB60		VL1			•				AA = L + 184
WM60 / WV60 / WZ60		VL1			•				AA = L + 184
WM80 / WV80 / MLSM60D		VL1				•			AA = L + 176
MLSM80Z	•						•		AA = L + 244
WM120 / WV120 / MLSM60D / MLSM80D		VL2					•		AA = L + 244

AA = C/C distance between units
L = total length of shaft and coupling assembly

VWZ Intermediate Shafts, ordering key

	1	2	3
Example	VWZ-060	-02	-0700

1. Intermediate shaft size
VWZ-030 = VWZ-30
VWZ-040 = VWZ-40
VWZ-060 = VWZ-60
VWZ-06V = VWZ-60V
VWZ-080 = VWZ-80
VWZ-100 = VWZ-100

2. Type of unit and type of mounting
-01 = WH40 for type I mounting
-02 = WH50 / WHZ50 for type I mounting
-03 = WM80Z for type I mounting
-04 = WH80 / WHZ80 for type I mounting
-05 = WH120 for type I mounting
-06 = WM60Z for type I mounting
-07 = MLSH60Z for type I mounting
-08 = WB40 / WM40 for type II mounting on VLO gears
-09 = WB60 for type II mounting on VL1 gears
-10 = WM60 / WV60 / WZ60 for type II mounting on VL1 gears
-11 = WM80 / WV80 / MLSM60D for type II mounting on VL1 gears
-12 = MLSM80Z for type I mounting
-13 = WM120 / WV120 / MLSM60D / MLSM80D for type II mounting on VL2 gears

3. C/C distance between units (AA)
- • • • • = distance in mm

Accessories

Motors, Gears and Transmission Kits

DSP Intermediate Shafts, data

Shaft	Weight of shaft [kg]	Max. speed [rpm]	Shaft diameter [mm]
DSP-05B	0,3 + 1,3 × Lm	1500	20
DSP-06B	0,3 + 1,3 × Lm	1500	20
DSP-07B	0,6 + 2,6 × Lm	1500	30
DSP-10B	0,6 + 2,6 × Lm	1500	30
DSB--ZB	0,6 + 2,6 × Lm	1500	30
DSP-TBS	0,6 + 2,6 × Lm	1500	30

Lm = C/C distance between units in cm

The DSP intermediate shaft can be installed directly between two belt driven units or between two screw driven units using a TBS worm gear. Couplings and tube are included in the shipment. Support bearings may need to be installed if the critical speed of the shaft is exceeded. See diagram. Support bearings can be ordered from your local bearing supplier.

DSP-05B/06B/07B/10B/-ZB

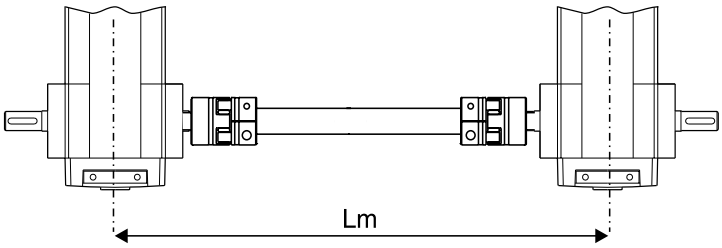

DSP-TBS

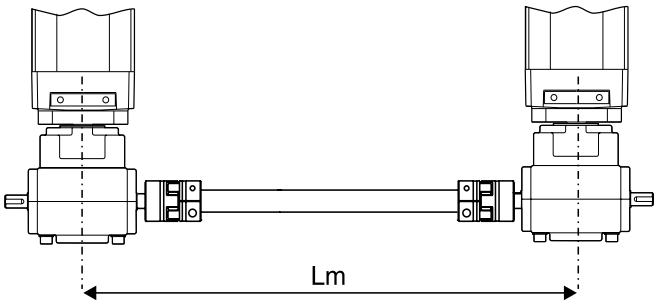

Critical Speed of Shaft

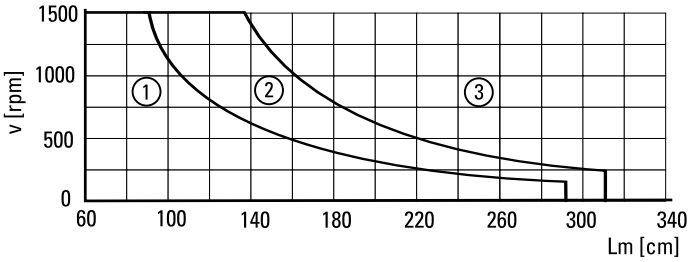

1: No support bearing required
2: Support bearing required for DSP-05B and DSP-06B
3: Support bearing always required

Accessories

Motors, Gears and Transmission Kits

DSP Intermediate Shafts, compatibility table

Unit	Drive type	DSP-05B	DSP-06B	DSP-07B	DSP-10B	DSP--ZB	DSP-TBS
M50	belt	•					
M55	belt		•				
M75	belt			•			
M100	belt				•		
ZB	belt					•	
M55	screw						•
M75	screw						•
M100	screw						•

DSP Intermediate Shafts, ordering key

	1	2
Example	DSP-06B	-305

1. Intermediate shaft size and type
DSP-05B = for belt driven M50 units
DSP-06B = for belt driven M55 units
DSP-07B = for belt driven M75 units
DSP-10B = for belt driven M100 units
DSP--ZB = for belt driven ZB units
DSP-TBS = for screw driven M55, M75 or M100 units with TBS worm gear

2. C/C distance between units in cm (Lm)
-• • • = length in cm

Accessories

Motors, Gears and Transmission Kits

Spring Set Brake

Unit type	p/n	Nema size	Static torque [lbf-in]	Supply voltage [VDC]	Dimensions [in]							Brake hub p/n[1]	Brake adaptor p/n
					F	G	H	J	K	L	HEX		
2DB08	TEB23A	23	NEMA 23	24	2.25	1.10	0.11	2.25	0.22	2.625	5/8	HEXHUB23A	MB08-23
2DB12	TEB23B	23	NEMA 23	24	2.25	1.10	0.11	2.25	0.22	2.625	5/8	HEXHUB23B	none required
2HB10, 2RB12	TEB23D	23	NEMA 23	24	2.25	1.10	0.11	2.25	0.22	2.625	5/8	HEXHUB23D	none required
2RB16	TEB23E	23	NEMA 23	24	2.25	1.10	0.11	2.25	0.22	2.625	5/8	HEXHUB23E	none required
2DB16	TEB34A	34	NEMA 34	24	2.25	1.10	0.11	3.25	0.22	3.875	5/8	HEXHUB34A	none required
2HB20	TEB34C	34	NEMA 34	24	2.25	1.31	0.11	3.25	0.22	3.875	7/8	HEXHUB34A	none required

[1] Hub included in spring set brake

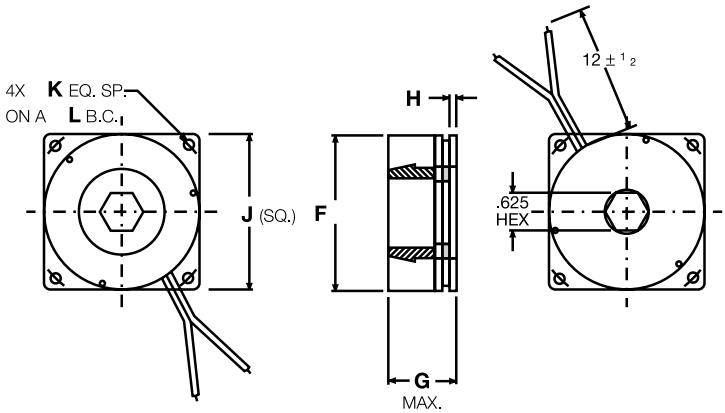

Mounts to support end of 2HB, 2RB, and 2DB units. The brake engages upon loss of power and provides resistance to back drive rotation of ball screws due to gravitational forces when power is interrupted to the brake unit. They are pre-burnished for maximum torque capacity and come with standard NEMA 23, 34 or 42 mounting patterns for easy field retrofit. Compact size minimizes change to the overall system envelope. The 2HB, 2RB, and 2DB ordering keys can be configured with the brake as part of the assembly. See ordering keys or www.linearmotioneering.com for details. The part numbers listed here are for the brake parts as separate items.

Spring Set Brake Hubs

Brake type	p/n	Unit type	Set screw torque [in-lb][1]	Dimensions [in (mm)]				
				A	B	C	D	E
TEB23A	HEXHUB23A	2DB08	36	1.53	3/16	0.15	#10/32	5/8
TEB23B	HEXHUB23B	2DB12	36	1.31	1/4	0.26	#10/32	5/8
TEB23D	HEXHUB23D	2HB10, 2RB12	36	(20)	(8)	(5)	M4	5/8
TEB23E	HEXHUB23E	2RB16	36	(20)	(20)	(5)	M4	5/8
TEB34A	HEXHUB34A	2DB16	36	1.67	3/8	0.44	#10/32	5/8
TEB34C	HEXHUB34A	2HB20	36	(32)	14	(6)	M5	7/8

[1] It is suggested a serviceable thread locking compound be used.

HEXHUB •••

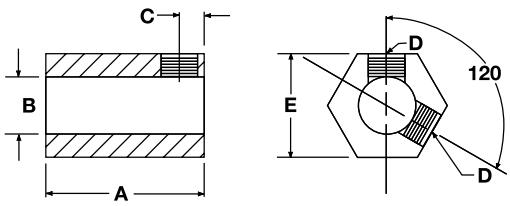

SPLHUB42A

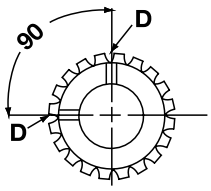

Accessories

Electrical Feedback Devices

Limit Switch Brackets[1]

Unit type	I	For limit switch type	I I	For limit switch type
M50	D393 035	ZCM-D21	–	–
M55	D313 427	ZCM-D21	D313 428	ZCM-D21
M75	D312 860	XCK-M115	D312 861	XCK-M115
M100	D312 330	XCK-M115	D312 331	XCK-M115

[1] No limit switches included in the shipment.

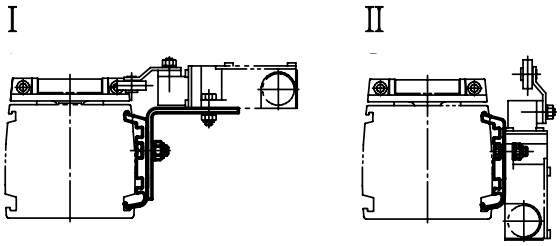

Limit Switch Brackets for Z3

Unit type	p/n	For limit switch type
Z3	D800 042	XCK-M115

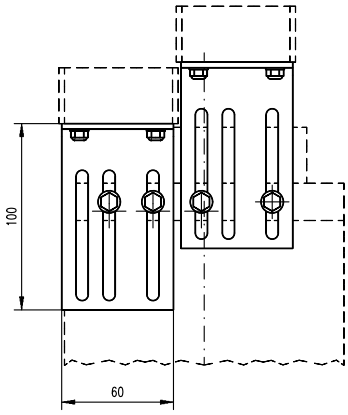

The limit switch brackets are adjustable in height. The limit switches on the brackets are operated by the maximum extended and maximum retracted end of stroke bars on top of the Z3 units. Two brackets are required.

Limit Switches

Switch type	p/n	Protection degree	Contacts	Cable
XCK-M115	D535 107	IP67	NO + NC	–
ZCM-D21	D535 102	IP67	NO + NC	1 meter

Accessories

Electrical Feedback Devices

Sensor Brackets for Cylindrical Sensors[1]

Unit type	I	For sensor diameter	I I	For sensor diameter
M55	D313 429	M12	D313 430	M12
M75	D312 862	M18	D312 863	M18
M100	D312 332	M18	D312 333	M18

[1] no sensors included in the shipment

I

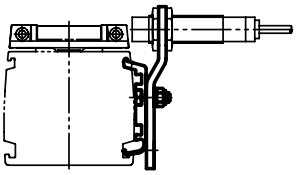

II

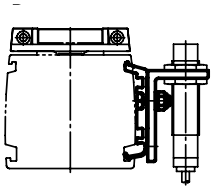

Cylindrical Inductive Sensors

Sensor type	p/n	Diameter	Input voltage	Max. current	Protection degree	Contacts	Cable
PNP	D535 085	M12	12 - 48 Vdc	0,2 A	IP67	NO	connector
PNP	D535 089	M18	12 - 48 Vdc	0,2 A	IP67	NO	connector

Cylindrical Inductive Sensor Connectors

For sensor diameter	p/n
M12	D535 092
M18	D535 091

Accessories

Electrical Feedback Devices

Sensor Packages

Unit type	Package type	p/n	Output type	Output operation	Frequency [1]	Supply voltage [VDC]	Cable length [m]	Sdetract [mm]
2HB10	One home sensor	LSP2HBM10-N-1	NPN	NO	1 × V	12 - 24	5	-
		LSP2HBM10-P-1	PNP	NO	1 × V	12 - 24	5	-
	Two limit switch sensors	LSP2HBM10-N-2	NPN	NC	2 × S	12 - 24	5	30
		LSP2HBM10-P-2	PNP	NC	2 × S	12 - 24	5	30
	One home and two limit switch sensors	LSP2HBM10-N-3	NPN	1 × NC, 2 × NO	1 × V, 2 ×S	12 - 24	5	30
		LSP2HBM10-P-3	PNP	1 × NC, 2 × NO	1 × V, 2 ×S	12 - 24	5	30
2HB20	One home sensor	LSP2HBM20-N-1	NPN	NO	1 × V	12 - 24	5	-
		LSP2HBM20-P-1	PNP	NO	1 × V	12 - 24	5	-
	Two limit switch sensors	LSP2HBM20-N-2	NPN	NC	2 × S	12 - 24	5	30
		LSP2HBM20-P-2	PNP	NC	2 × S	12 - 24	5	30
	One home and two limit switch sensors	LSP2HBM20-N-3	NPN	1 × NC, 2 × NO	1 × V, 2 ×S	12 - 24	5	30
		LSP2HBM20-P-3	PNP	1 × NC, 2 × NO	1 × V, 2 ×S	12 - 24	5	30
2RB12	One home sensor	LSP2RM12-N-1	NPN	NO	1 × V	12 - 24	5	-
		LSP2RM12-P-1	PNP	NO	1 × V	12 - 24	5	-
	Two limit switch sensors	LSP2RM12-N-2	NPN	NC	2 × S	12 - 24	5	35
		LSP2RM12-P-2	PNP	NC	2 × S	12 - 24	5	35
	Home and limit switch sensors	LSP2RM12-N-3	NPN	1 × NC, 2 × NO	1 × V, 2 ×S	12 - 24	5	35
		LSP2RM12-P-3	PNP	1 × NC, 2 × NO	1 × V, 2 ×S	12 - 24	5	35
2RB16	One home sensor	LSP2RM16-N-1	NPN	NO	1 × V	12 - 24	5	-
		LSP2RM16-P-1	PNP	NO	1 × V	12 - 24	5	-
	Two limit switch sensors	LSP2RM16-N-2	NPN	NC	2 × S	12 - 24	5	35
		LSP2RM16-P-2	PNP	NC	2 × S	12 - 24	5	35
	One home and two limit switch sensors	LSP2RM16-N-3	NPN	1 × NC, 2 × NO	1 × V, 2 ×S	12 - 24	5	35
		LSP2RM16-P-3	PNP	1 × NC, 2 × NO	1 × V, 2 ×S	12 - 24	5	35

[1] V = varied frequency. S = standard frequency.

LIMIT SWITCH POSITION 2HBE

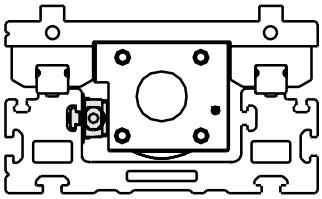

LIMIT SWITCH POSITION 2RB

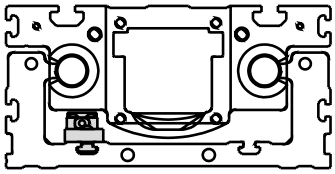

Each 2HB and 2RB can be equipped with sensors inside of the profile where they are protected from mechanical damage. The systems are provided with access holes on each side of each end plate for passage of the sensor package cable. Using limit switch sensors will reduce the effective stroke. The standard position will approximately reduce the stroke by the distance listed in the Sdetract column. The 2HB, 2RB, 2HE and 2RE ordering keys can be configured with the limit switches and/or a home sensor as part of the assembly. See ordering keys or www.linearmotioneering.com for details. The part numbers listed above are for the limit switches and/or home sensors as a separate items.

Accessories

Electrical Feedback Devices

EN2 Inductive Sensors, part numbers

Sensor type	Cable length [m]	p/n
Normally closed	2	671 545 0305
Normally open	2	671 545 0304
Normally closed	10	671 545 0307
Normally open	10	671 545 0306

To be able to mount the EN2 inductive sensors on a unit the ENT14x16 sensor rail is required (see page 178) except for units WM120 and WV120 where they can be fitted directly to the profile of the unit.

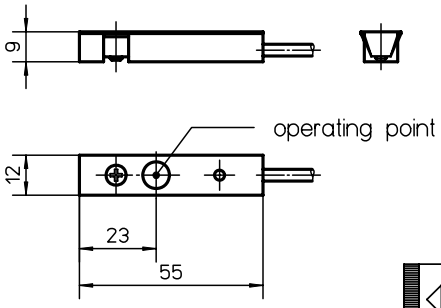

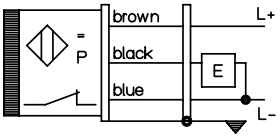

EN2 Inductive Sensors, data

Parameter		EN2
Supply voltage	[Vdc]	10 – 30
Max. load current	[A]	0,2
Operating distance	[mm)	2
LED indicator for switch		yes
Protection class		IP67
Cable type		screened
Weight with cable L = 2 m with cable L= 10 m	[kg]	 0,04 0,19

Magnetic Sensors, data

Parameter		
Max. power	[W]	10
Max. voltage	[Vdc]	100
Max. current	[A]	0,5
LED indicator for switch		no
Protection class		IP67
Cable length	[m]	3
Cable cross section	[mm²]	2 × 0,15
Operating temperature limits	[°C]	-25 – 65
Weight	[kg]	0,050

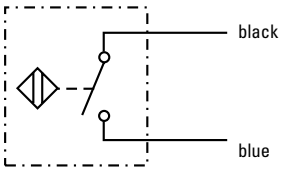

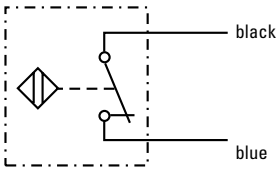

Magnetic Sensors, part numbers

Sensor type	suitable units	p/n
Normally closed	M50, Z2, Z3	D535 071
Normally open	M50, Z2, Z3	D535 070

On M50 the magnetic sensors are mounted directly in the sensor slot of the profiles of the units and require no mounting bracket while Z2 and Z3 require magnetic sensor mounting brackets. The sensor is fixed in position by two M3 size locking screws (A1). The cable (A2) is molded into the sensor.

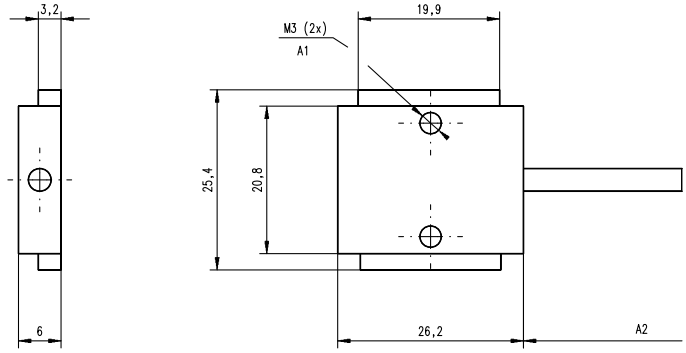

Accessories

Electrical Feedback Devices

IG602 Encoders, data

Parameter		IG602
Supply voltage	[Vdc]	
Type 1		5 ±10%
Type 2		10 – 30
Output type		
Type 1		line driver
Type 2		push-pull
Pulses per revolution	[ppr]	
Type 1		100 – 2500
Type 2		100 – 600
Length (L)	[mm]	
Type 1		51,5
Type 2		56,0
Weight	[kg]	
Type 1		0,36
Type 2		0,36

The IG602 encoders come with mounting screws but no coupling or connector. To be able to mount the encoder to the unit, the unit must have a shaft for encoders. See the ordering keys of the units. The encoders can also be ordered mounted to the unit from factory. See ADG encoder option kit on page 170.

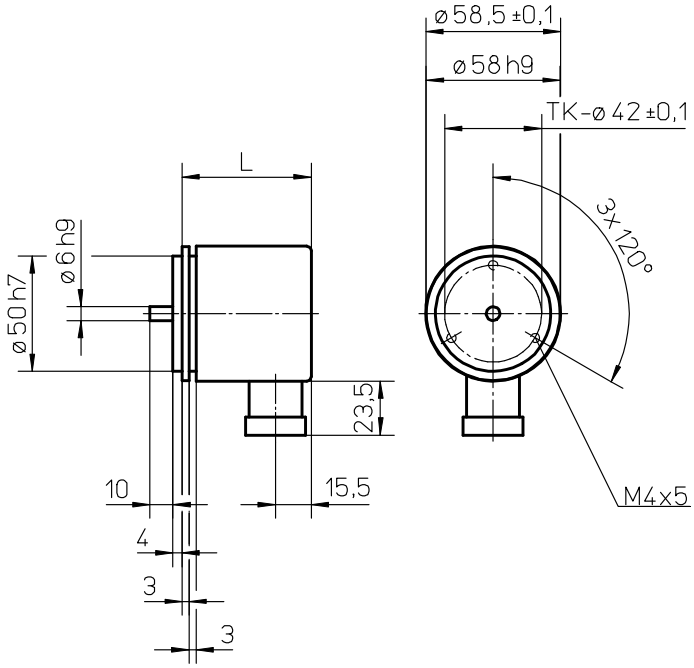

IG602 Encoders, part numbers

Encoder type	Supply voltage [Vdc]	Pulses per revolution	p/n
Type 1	5	100	671 521 0194
Type 1	5	200	671 521 0195
Type 1	5	500	671 521 0196
Type 1	5	600	671 521 0197
Type 1	5	1000	671 521 0198
Type 1	5	1250	671 521 0199
Type 1	5	1500	671 521 0200
Type 1	5	2000	671 521 0192
Type 1	5	2500	671 521 0201
Type 2	10 – 30	100	671 521 0193
Type 2	10 – 30	200	671 521 0202
Type 2	10 – 30	500	671 521 0203
Type 2	10 – 30	600	671 521 0204
Type 2	10 – 30	600	

STE001 Encoder Connector, data

Parameter		STE001
Number of poles		12
Protection class		IP67
Execution		jack
Cable entrance		straight
Weight	[kg]	0,04
Part number		6715600153

Encoder Cable, data

Parameter	p/n
5 m cable length	671 555 0068
10 m cable length	671 555 0069

The encoder cables come fitted with a STE001 encoder connector in one of the ends.

Accessories

Electrical Feedback Devices

ES Limit Switch Option Kit

Unit type	I	II	III	A	B	C	D	E	F	G
WH50 [1]	•			34	60,5	10	26	49	58,5	196
WH80	•			31	76	10	39	49	78,5	196
WH120	•			34	88	10	51	49	78,5	196
WHZ50	•			34	61	10	26	49	58,5	196
WHZ80	•			31	76	10	39	49	78,5	196
WM60		•		40	69	32	38	50	63	200
WM80		•		40	73	32	42	50	79	200
WM120		•		40	89	32	58	50	94	200
WM60Z	•			40	69	32	38	50	73	200
WM80Z [2]	•			40	73	32	42	50	99 (89)	200
WV60		•		40	69	32	38	50	33	200
WV80		•		40	73	32	42	50	39	200
WV120		•		40	89	32	58	50	59	200
MLSM60D		•		40	73	32	32	50	79	200
MLSH60Z	•			40	73	32	42	50	79	200
MLSM80D		•		40	85	32	54	50	101	200
MLSM80Z		•		40	85	32	54	50	101	200
WZ60 [1]			•	60	22,5	16	30	113	53	–
WZ80 [1]			•	60	22,5	16	30	112	84	–

[1] Limit switches for these units can not be moved. On all other units the switches can be re-positioned by the customer. [2] Value in brackets = for short carriage.

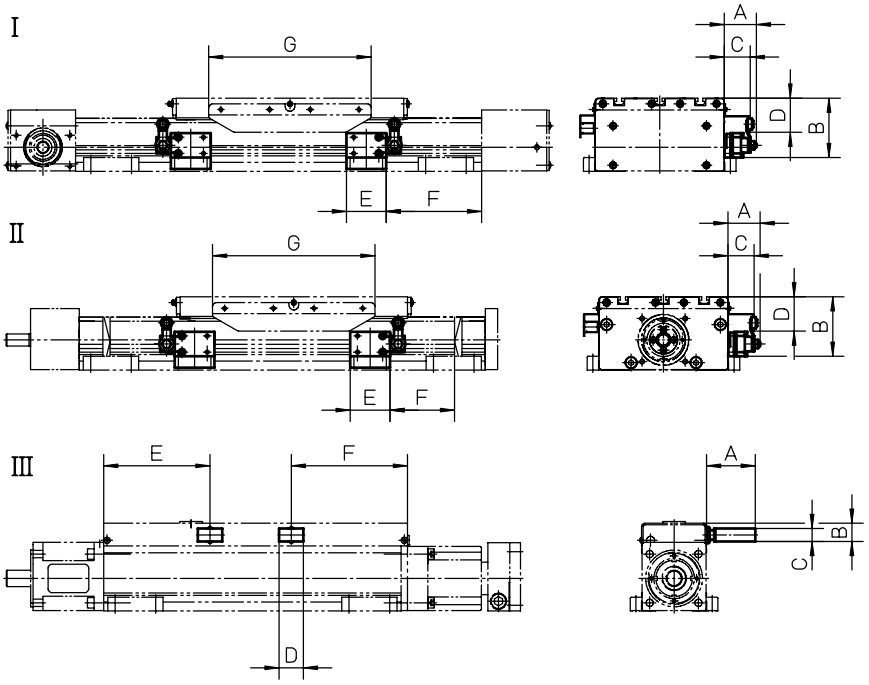

The ES limit switch assembly is an option that is mounted at the factory. The limit switches are placed 10 mm from the mechanical ends of the unit. Each limit switch has one NO and one NC contact with positive opening action. Protection degree is IP67. Type I and II switches can be repositioned along the profile by the customer. Note! The ES limit switch option and any of the sensor rail options ENT14x16, ENF14x16 or ENK can not be mounted on the same side of the unit.

Accessories

Electrical Feedback Devices

ES Limit Switch Option Kit, ordering key

	1	2	3	4
Example	ESK07	-L	-01	-10

1. Compatible unit
ESK02 = WH50
ESK03 = WH80
ESK04 = WH120
ESK05 = WM40
ESK06 = WM60 / WM60Z
ESK07 = WM80 / WM80Z
ESK08 = WM120
ESK09 = WV60
ESK10 = WV80
ESK11 = WV120
ESK12 = WHZ50
ESK13 = WHZ80
ESK14 = WZ60
ESK15 = WZ80
ESK16 = MLSH60Z
ESK18 = MLSM80Z
ESK19 = MLSM60D
ESK20 = MLSM80D

2. Mounting side of the unit
-L = left side
-R = right side

3. Switch configuration on side A
-00 = no switch on side A
-01 = switch with 1 m cable
-05 = switch with 5 m cable
-10 = switch with 10 m cable

4. Switch configuration on side B
-00 = no switch on side B
-01 = switch with 1 m cable
-05 = switch with 5 m cable
-10 = switch with 10 m cable

ES-••-R-••-••

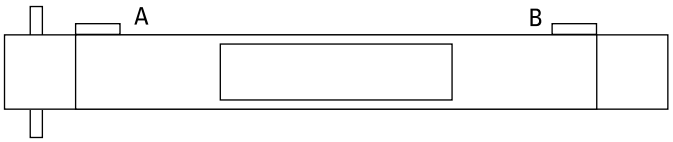

ES-••-L-••-••

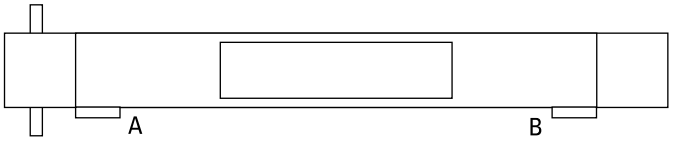

Accessories

Electrical Feedback Devices

ENT14x16 Inductive Sensor Rail

Unit type	p/n
WH40 / WH50 / WH80 / WH120 / WHZ50 / WHZ80 / WM40 / WM60 / WM80 / WM60Z / WM80Z / WV60 / WV80 / MLSM60D / MLSM80D / MLSH60Z / MLSM80Z / WZ60 / WZ80 / WB40 / WB60	671 545 0283

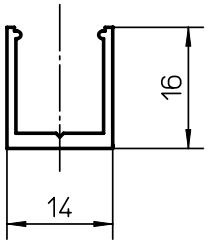

The ENT14x16 inductive sensor rail is mounted to the side of a unit or along any type of beam or profile. Sensors of type EN2 can be mounted in the rail. The rail can also serve as a cable duct for the sensor cables. The rail is sealed with a cover which comes with the rail. The rail comes in lengths of max 3000 mm. Drilling in the profile of the unit is required when mounting the rail. When ordering, specify part number and length of the rail. Note1! WM120 and WV120 units do not require any rail as the EN2 sensors can be fitted directly to the profile of the units. Note2! ES limit switch option and ENT14x16 rail can not be mounted on the same side of the unit.

ENF and ENK Inductive Sensor Rail Option Kit, compatibility table

Unit type	ENF / ENK
WH40 / WH50 / WH80 / WH120 / WHZ50 / WHZ80 / WM40 / WM60 / WM80 / WM60Z / WM80Z / WV60 / WV80 / MLSM60D / MLSM80D / MLSH60Z / MLSM80Z / WZ60 / WZ80 / WB40 / WB60 / M50 / M75 / M100	•

ENF

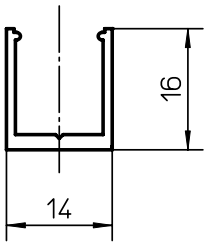

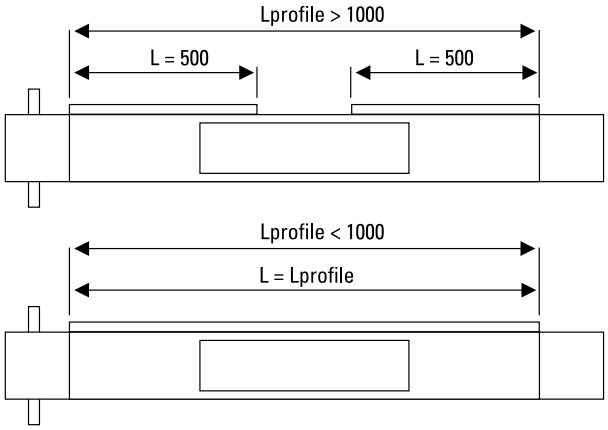

ENK

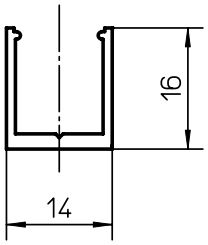

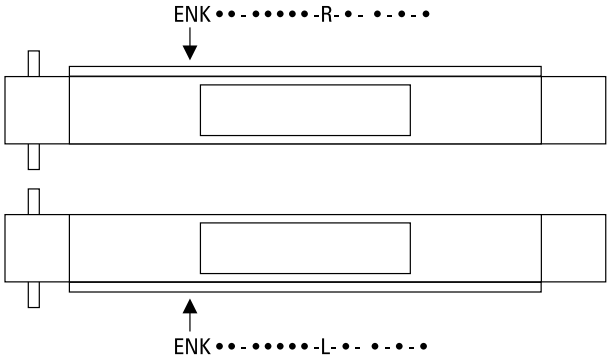

The ENF and ENK inductive sensor rail option kits are mounted at the factory. The ENF option consists of two 500 mm long ENT14x16 sensor rails mounted in each end of the unit on the left or right side of the profile. In cases where the unit is too short to allow two 500 mm sensor rails to be mounted, then one rail is mounted along the entire profile of the unit. The ENK option also consists of ENT14 x16 sensor rails but the ENK option has sensor profiles that run along the entire profile of the unit. In the shipment of both ENF and ENK the specified amount and type of EN2 sensors are included. The sensors are fitted to the sensor rail by the customer at the desired positions.

Note1! WM120 and WV120 units do not require any ENF or ENK options as the EN2 sensors can be fitted directly to the profile of the units.
Note2! The ES limit switch option and ENF rail can not be mounted on the same side of the unit.
Note3! Movopart M50/75/100 units require adapter plates for mounting the ENF/ENK to the profile. See page 135 for adapter plate dimensions.

Accessories

Electrical Feedback Devices

ENK and ENF Inductive Sensor Rail Option Kit, ordering key

	1	2	3	4	5	6	7	8
Example	ENK16	-S	-04000	-R	-2	-0	-1	-6

1. Type of rail and compatible unit

ENK01 = ENK rail for WH40	ENF01 = ENF rail for WH40
ENK02 = ENK rail for WH50	ENF02 = ENF rail for WH50
ENK03 = ENK rail for WH80	ENF03 = ENF rail for WH80
ENK04 = ENK rail for WH120	ENF04 = ENF rail for WH120
ENK05 = ENK rail for WM40	ENF05 = ENF rail for WM40
ENK06 = ENK rail for WM60 / WV60	ENF06 = ENF rail for WM60 / WV60
ENK07 = ENK rail for WM80 / WV80	ENF07 = ENF rail for WM80 / WV80
ENK08 = ENK rail for WM120 / WV120	ENF08 = ENF rail for WM120 / WV120
ENK09 = ENK rail for WM60Z	ENF09 = ENF rail for WM60Z
ENK10 = ENK rail for WM80Z	ENF10 = ENF rail for WM80Z
ENK11 = ENK rail for WHZ50	ENF11 = ENF rail for WHZ50
ENK12 = ENK rail for WHZ80	ENF12= ENF rail for WHZ80
ENK13 = ENK rail for WZ60	ENF13 = ENF rail for WZ60
ENK14 = ENK rail for WZ80	ENF14 = ENF rail for WZ80
ENK15 = ENK rail for MLSH60Z	ENF15 = ENF rail for MLSH60Z
ENK17 = ENK rail for MLSM80Z	ENF17 = ENF rail for MLSM80Z
ENK18 = ENK rail for MLSM60D	ENF18 = ENF rail for MLSM60D
ENK19 = ENK rail for MLSM80D	ENF19 = ENF rail for MLSM80D
ENK20 = ENK rail for WB40	ENF20 = ENF rail for WB40
ENK21 = ENK rail for WB60	ENF21 = ENF rail for WB60
ENK28 = ENK rail for MF/MG07K	ENF28 = ENF rail for MF/MG07K
ENK29 = ENK rail for MF/MG06K	ENF29 = ENF rail for MF/MG06K
ENK30 = ENK rail for MF/MG06B	ENF30 = ENF rail for MF/MG06B
ENK31 = ENK rail for MF/MG07B	ENF31 = ENF rail for MF/MG07B
ENK32 = ENK rail for MF/MG10K	ENF32 = ENF rail for MF/MG10K
ENK33 = ENK rail for MF/MG10B	ENF33 = ENF rail for MF/MG10B

2. Number of carriages

-S = single carriage

-D = double carriages

3. Total length of unit (L tot)

- • • • • • = distance in mm

4. Mounting side of the unit

-L = left side

-R = right side

5. Number of EN2 sensors with NC contact and 2 m cable

- • = 0 – 9 sensors / normally closed / 2 m cable

6. Number of EN2 sensors with NO contact and 2 m cable

- • = 0 – 9 sensors / normally open / 2 m cable

7. **Number of EN2 sensors with NC contact and 10 m cable**

- • = 0 – 9 sensors / normally closed / 10 m cable

8. **Number of EN2 sensors with NO contact and 10 m cable**

- • = 0 – 9 sensors / normally open / 10 m cable

Accessories

Electrical Feedback Devices

ADG Encoder Option Kit

Unit type	Mounting type I	Mounting type II	A	B	øC	D
WH40	•		115	95	58,5	ø60
WH50 / WHZ50	•		120	96	58,5	50 × 50
WH80 / WHZ80	•		139	100	58,5	90 × 90
WH120	•		153	93	58,5	100 × 100
WM40		•	25	95	58,5	–
WM60		•	31	95	58,5	–
WM80		•	40	95	58,5	–
WM120		•	74	95	58,5	–
WM60Z	•		124	94	58,5	60 × 60
WM80Z	•		138	98	58,5	65 × 65
WB40		•	20,8	95	58,5	–
WB60		•	32,5	95	58,5	–
MLSM60D		•	37	95	58,5	–
MLSM80D		•	46	95	58,5	–
MLSH60Z	•		174,5	95	58,5	78 × 59
MLSM80Z	•		214,5	95	58,5	100 × 80

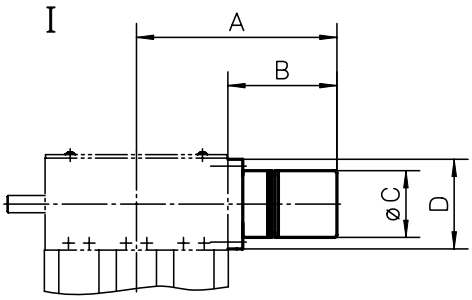

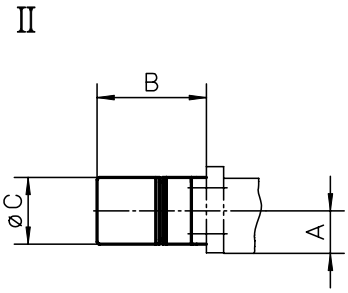

The ADG encoder option kit is an option that is mounted to the unit at the factory. It includes an IG602 encoder, a STE001 encoder connector and an encoder mounting flange with coupling. Cable can also be supplied in 5 or 10 meter lengths.

Accessories

Electrical Feedback Devices

ADG Encoder Option Kit, ordering key

	1	2	3
Example	ADG-08	-05-0600	-00

1. Compatible unit
ADG-01 = WH40
ADG-02 = WH50 / WHZ50
ADG-03 = WH80 / WHZ80
ADG-04 = WH120
ADG-05 = WM40
ADG-06 = WM60 / WV60
ADG-07 = WM80 / WV80
ADG-08 = WM120 / WV120
ADG-09 = WM60Z
ADG-10 = WM80Z
ADG-11 = MLSH60Z
ADG-13 = MLSM80Z
ADG-14 = MLSM60D
ADG-15 = MLSM80D
ADG-16 = WB40
ADG-17 = WB60

2. Supply voltage and number of pulses
-05-0100 = 5 volts, 100 pulses per revolution
-05-0200 = 5 volts, 200 pulses per revolution
-05-0500 = 5 volts, 500 pulses per revolution
-05-0600 = 5 volts, 600 pulses per revolution
-05-1000 = 5 volts, 1000 pulses per revolution
-05-1250 = 5 volts, 1250 pulses per revolution
-05-2000 = 5 volts, 2000 pulses per revolution
-05-2500 = 5 volts, 2500 pulses per revolution
-24-0100 = 10 - 30 volts, 100 pulses per revolution
-24-0200 = 10 - 30 volts, 200 pulses per revolution
-24-0500 = 10 - 30 volts, 500 pulses per revolution
-24-0600 = 10 - 30 volts, 600 pulses per revolution

3. Cable and connector configuration
-00 = no cable only STE001 encoder connector
-05 = 5 m cable with STE001 encoder connector in one of the ends
-10 = 10 m cable with STE001 encoder connector in one of the ends

Accessories

Non-driven Linear Motion Systems

Dimensions	Projection
METRIC	

WH40N

» Ordering key - see page 205
» Technical data - see page 78

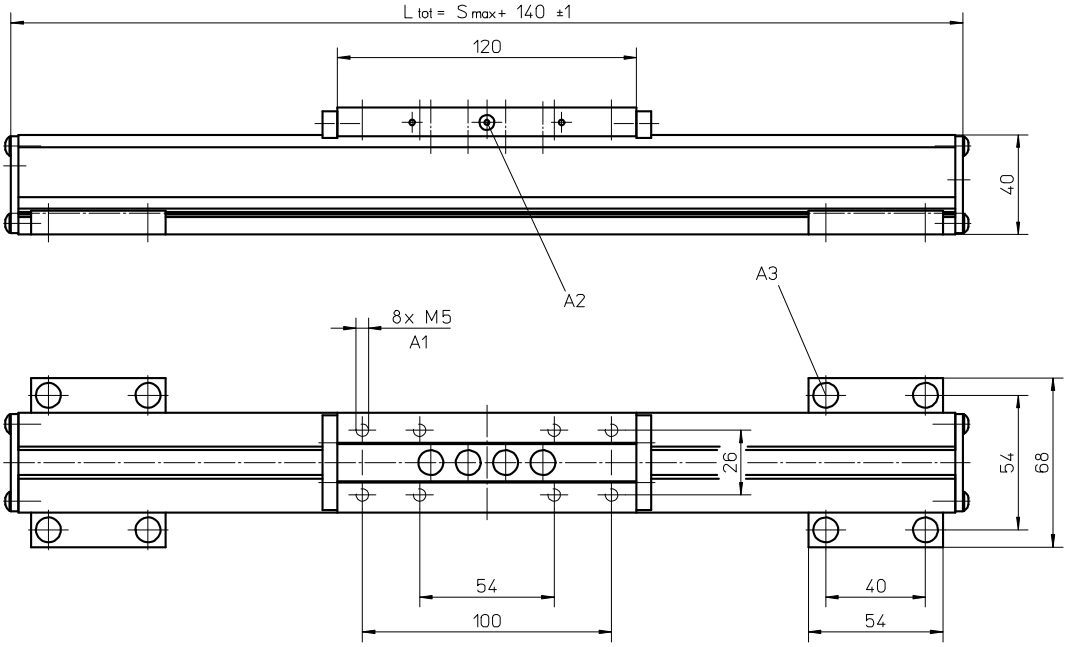

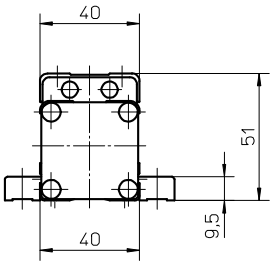

A1: depth 10
A2: lubricating nipple on both sides DIN3405 D 1/A

A3: socket cap screw ISO4762-M5×12 8.8

WH50N

» Ordering key - see page 205
» Technical data - see page 106

Dimensions	Projection
METRIC	

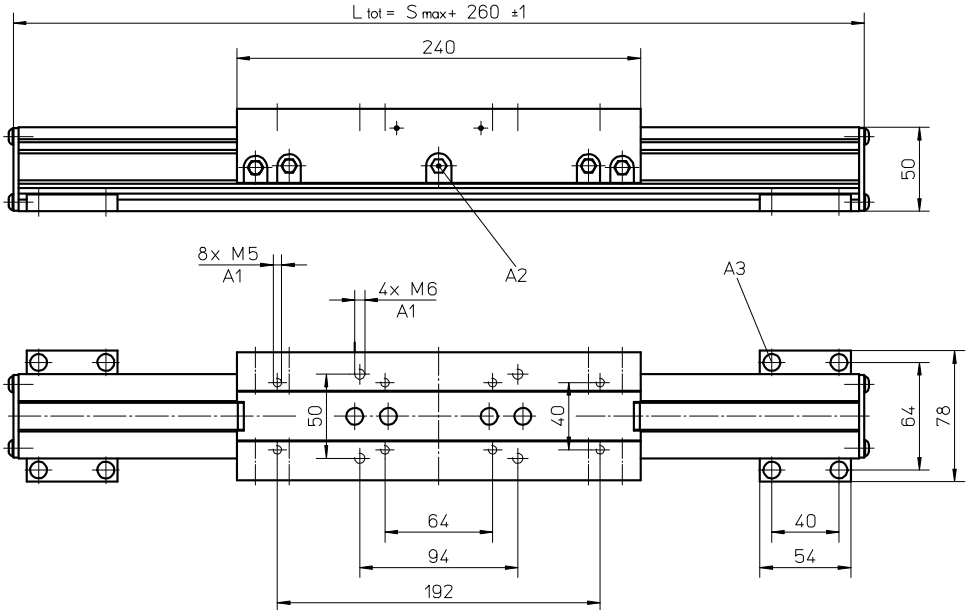

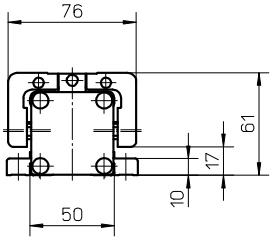

A1: depth 10
A2: funnel type lubricating nipple DIN3405-M6×1-D1

A3: socket cap screw ISO4762-M5×12 8.8

Accessories

Non-driven Linear Motion Systems

Dimensions	Projection
METRIC	

WH80N

» Ordering key - see page 205
» Technical data - see page 108

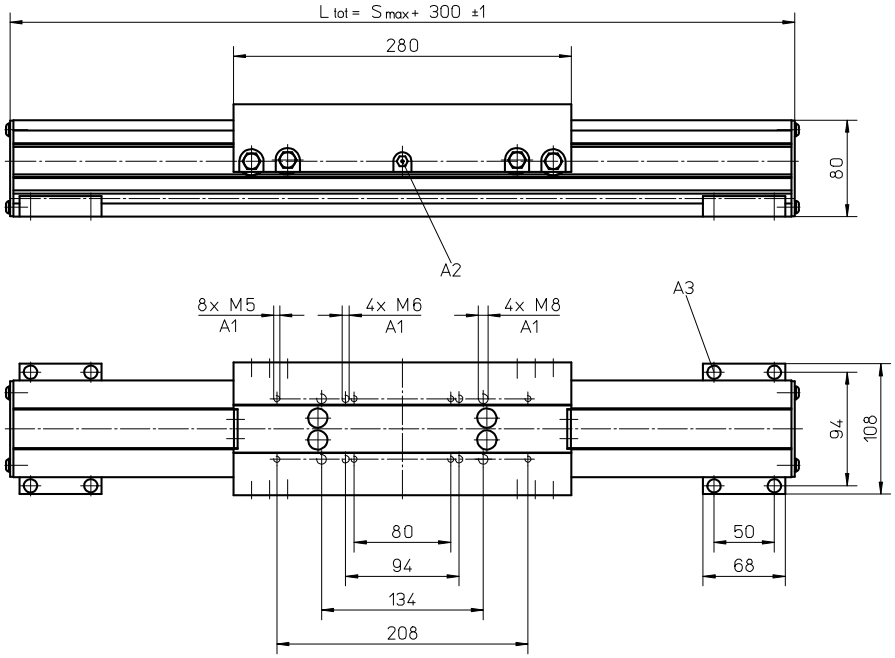

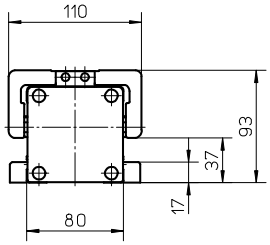

A1: depth 12
A2: funnel type lubricating nipple DIN3405-M6×1-D1

A3: socket cap screw ISO4762-M6×20 8.8

WH120N

» Ordering key - see page 205
» Technical data - see page 110

Dimensions	Projection
METRIC	

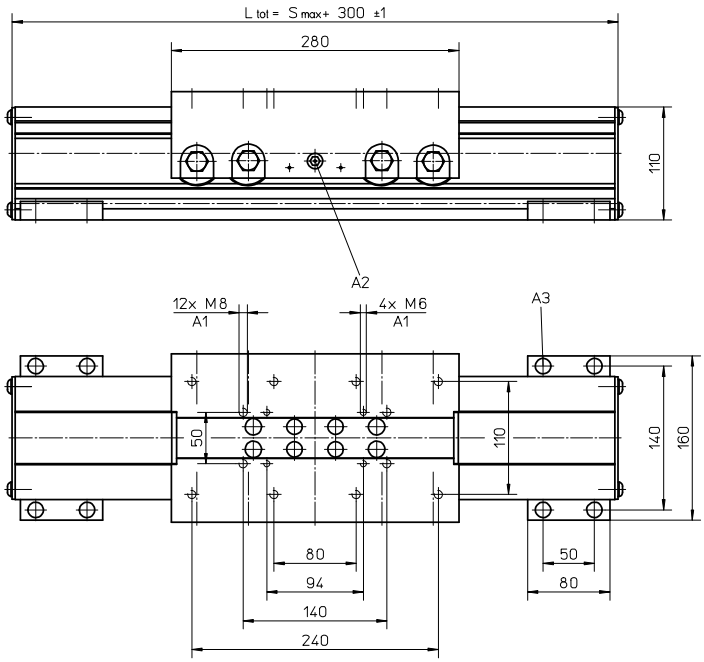

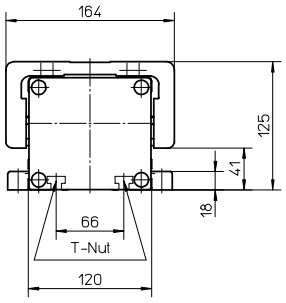

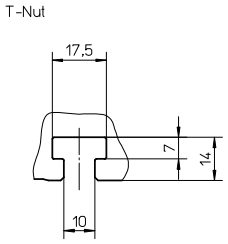

A1: depth 12
A2: funnel type lubricating nipple DIN3405-M6×1-D1

A3: socket cap screw ISO4762-M8×20 8.8

Accessories

Non-driven Linear Motion Systems

Dimensions	Projection
METRIC	

WM40N

» Ordering key - see page 205
» Technical data - see page 14

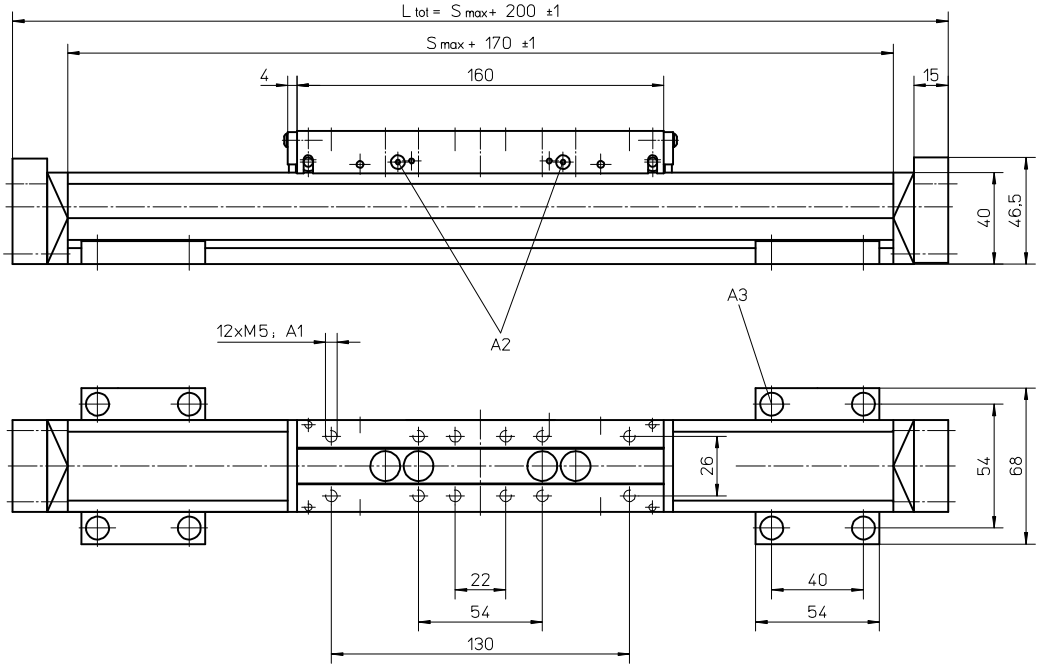

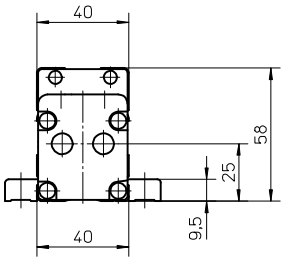

A1: depth 7
A2: lubricating nipple on both sides DIN3405 D 1/A

A3: socket cap screw ISO4762-M5×12 8.8

WM60N

» Ordering key - see page 205
» Technical data - see page 18

Dimensions	Projection
METRIC	

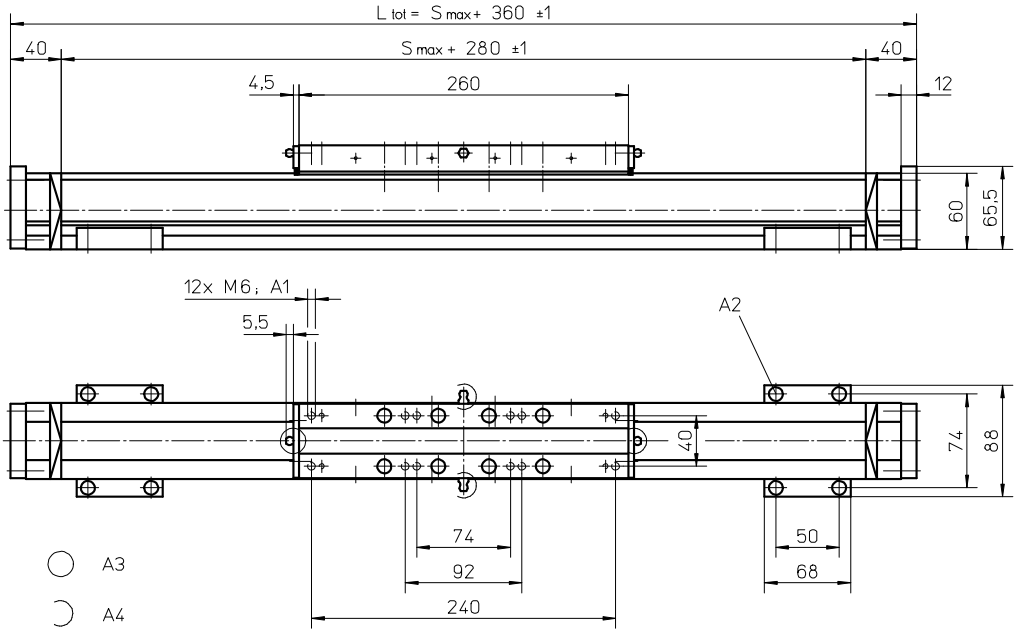

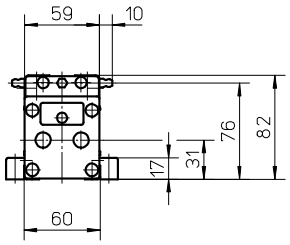

A1: depth 11
A2: socket cap screw ISO4762-M6×20 8.8

A3: tapered lubricating nipple to DIN71412 AM6
A4: can be changed over to one of the three alternative lubricating points by the customer

Accessories

Non-driven Linear Motion Systems

Dimensions	Projection
METRIC	

WM60N with Single Short Carriage

» Ordering key - see page 205
» Technical data - see page 20

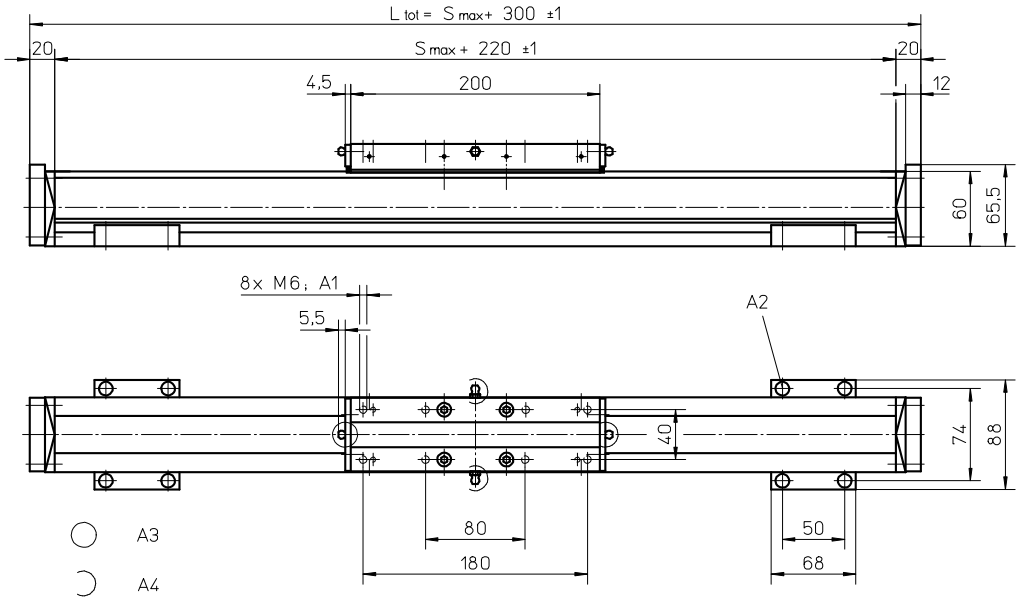

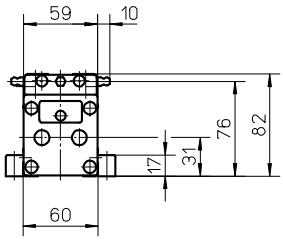

A1: depth 11
A2: socket cap screw ISO4762-M6×20 8.8

A3: tapered lubricating nipple to DIN71412 AM6
A4: can be changed over to one of the three alternative lubricating points by the customer

WM80N

» Ordering key - see page 205
» Technical data - see page 24

Dimensions	Projection
METRIC	

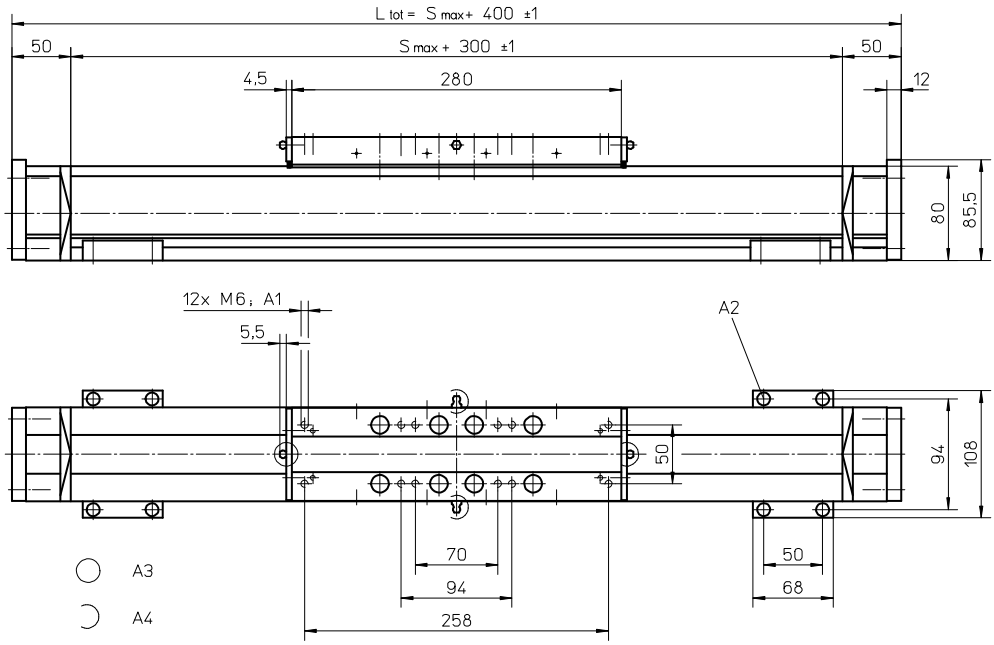

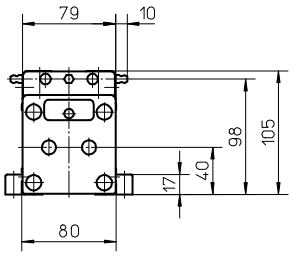

A1: depth 12
A2: socket cap screw ISO4762-M6×20 8.8

A3: tapered lubricating nipple to DIN71412 AM6
A4: can be changed over to one of the three alternative lubricating points by the customer

Accessories

Non-driven Linear Motion Systems

Dimensions	Projection
METRIC	

WM80N with Single Short Carriage

» Ordering key - see page 205
» Technical data - see page 26

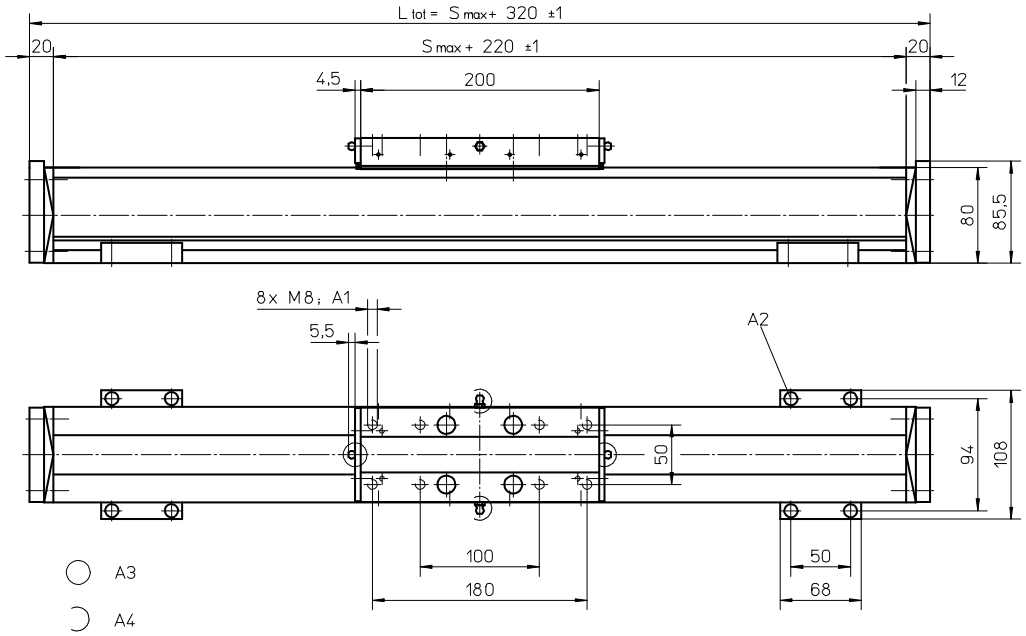

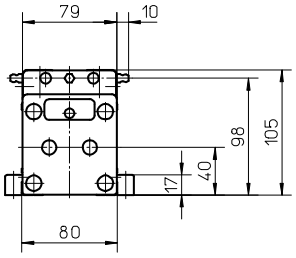

A1: depth 12
A2: socket cap screw ISO4762-M6×20 8.8

A3: tapered lubricating nipple to DIN71412 AM6
A4: can be changed over to one of the three alternative lubricating points by the customer

WM120N

» Ordering key - see page 205
» Technical data - see page 34

Dimensions	Projection
METRIC	

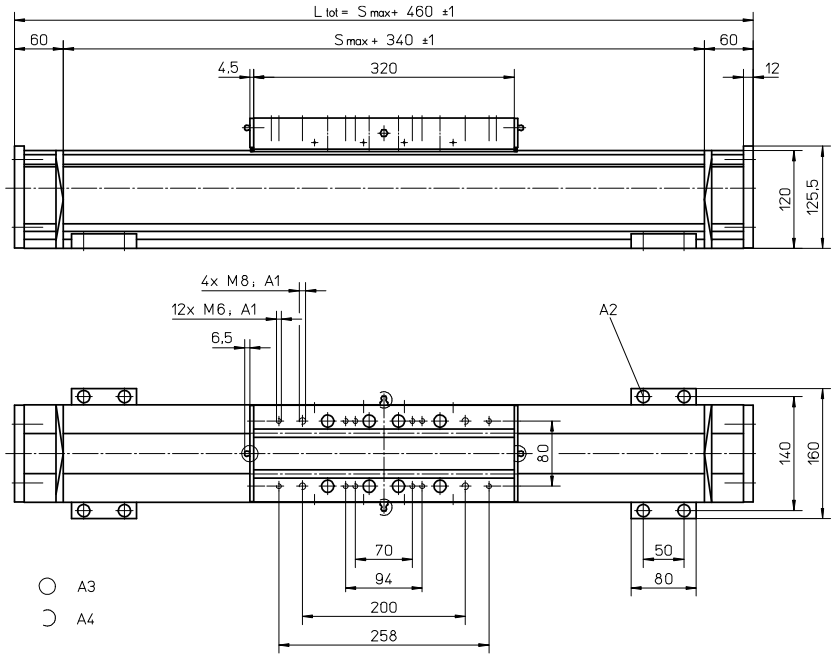

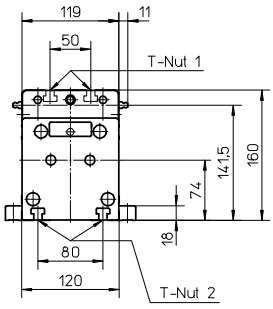

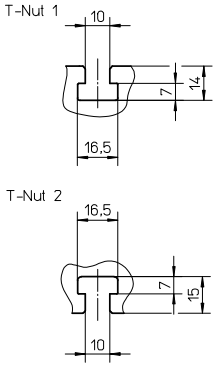

A1: depth 22
A2: socket cap screw ISO4762-M8×20 8.8

A3: tapered lubricating nipple to DIN71412 M8×1
A4: can be changed over to one of the three alternative lubricating points by the customer

Accessories

Non-driven Linear Motion Systems

Dimensions	Projection
METRIC	

M75N

» Ordering key - see page 206
» Technical data - see page 42

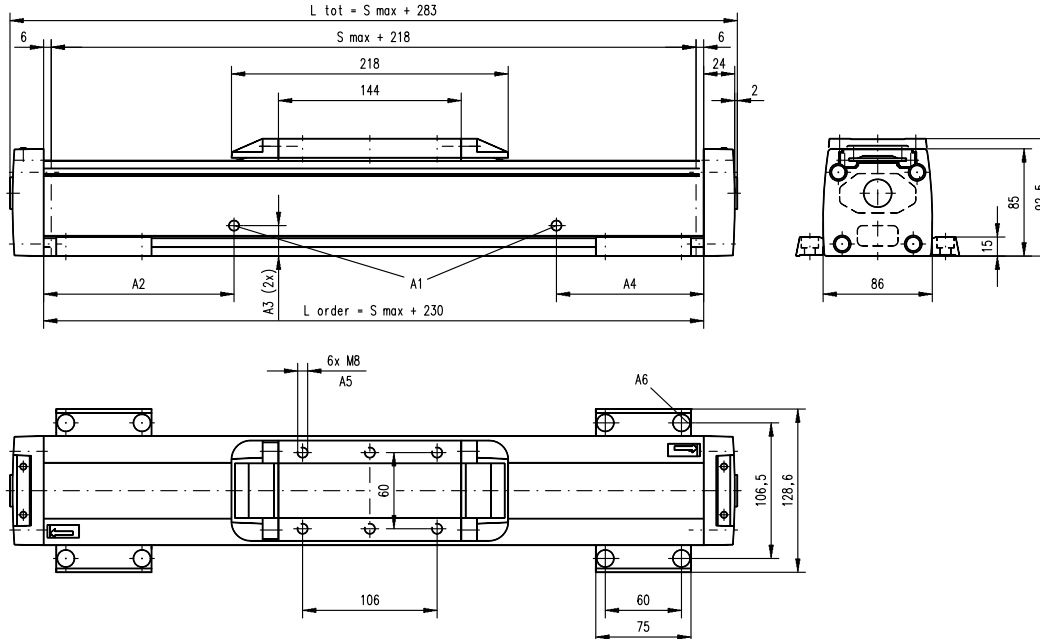

A1: lubrication holes ø6 (MG07N), ø10 (MF07N)
A2: 150 (MG07N), 100 (MF07N)
A3: 24 (MG07N), 43 (MF07N)
A4: 300 (MG07N), 320 (MF07N)
A5: depth 8 Heli coil
A6: ø13,5 / ø 8,5 for socket head cap screw M8

M100N

» Ordering key - see page 206
» Technical data - see page 44

Dimensions	Projection
METRIC	

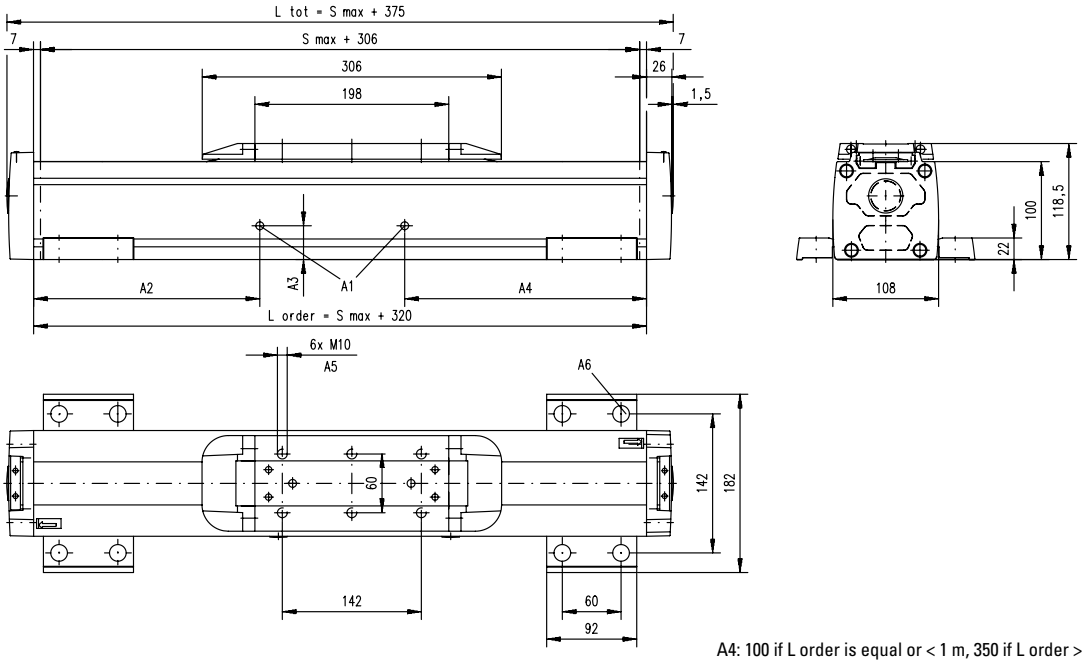

A1: lubrication holes ø6 (MG10N), ø10 (MF10N)
A2: 100 if L order is equal or < 1 m, 200 if L order > 1 m (MG10N), 265 (MF10N)
A3: 34,5 (MG10N), 56,5 (MF10N)
A4: 100 if L order is equal or < 1 m, 350 if L order > 1 m (MG10N)
265 if L order is equal or > 0,7 m, no hole if L order < 0,7 m (MF10N)
A5: depth 10 Heli coil
A6: ø17 / ø 10,5 for socket head cap screw M10

Additional Technical Data

Linear Motion Systems with Lead or Ball Screw Drive and Ball Guides

Technical Data

Parameter		WM40S	WM40D	WM60D	WM60S	WM60X	WM80D	WM80S	WM120D
Geometrical moment of inertia of the profile (Iy)	[mm^4]	$10,8 \times 10^4$	$10,8 \times 10^4$	$5,8 \times 10^5$	$5,8 \times 10^5$	$5,8 \times 10^5$	$1,85 \times 10^6$	$1,85 \times 10^6$	$7,7 \times 10^6$
Geometrical moment of inertia of the profile (Iz)	[mm^4]	$13,4 \times 10^4$	$13,4 \times 10^4$	$5,9 \times 10^5$	$5,9 \times 10^5$	$5,9 \times 10^5$	$1,94 \times 10^6$	$1,94 \times 10^6$	$9,4 \times 10^6$
Friction factor of the guide system (μ)		0,05	0,05	0,1	0,1	0,1	0,1	0,1	0,1
Efficiency of the unit		0,8	0,8	0,8	0,8	0,8	0,8	0,8	0,8
Bending factor (b)		0,0003	0,0003	0,0003	0,0003	0,0003	0,0003	0,0003	0,0003
Inertia of ball screw (jsp)	[kgm^2/m]	$1,13 \times 10^{-5}$	$1,13 \times 10^{-5}$	$8,46 \times 10^{-5}$	$8,46 \times 10^{-5}$	$8,46 \times 10^{-5}$	$2,25 \times 10^{-4}$	$2,25 \times 10^{-4}$	$6,34 \times 10^{-4}$
Dynamic load rating of ball screw (Cx)	[N]								
05 mm lead		4400	4400	10500	10500	10500	12300	12300	21500
10 mm lead		-	-	-	-	-	13200	13200	33400
20 mm lead		-	-	11600	11600	-	13000	13000	29700
40 mm lead		-	-	-	-	-	-	-	14900
50 mm lead		-	-	8400	8400	-	15400	15400	-
Dynamic load rating of ball guide (Cy)	[N]	2 × 2650	2 × 2650	4 × 11495	2 × 12964	4 × 11495	4 × 14356	2 × 18723	4 × 18723
Dynamic load rating of ball guide (Cz)	[N]	2 × 3397	2 × 3397	4 × 10581	2 × 11934	4 × 10581	4 × 13739	2 × 17919	4 × 17919
Distance between ball guide carriages (Lx)	[mm]	87	136	141,7	-	141,7	154	-	186
Distance between ball guide carriages (Ly)	[mm]	-	-	35	35	35	49,75	49,75	80,75

Parameter		WV60	WV80	WV120	MLSM60D	MLSM80D
Geometrical moment of inertia of the profile (Iy)	[mm^4]	$5,8 \times 10^5$	$1,85 \times 10^6$	$7,7 \times 10^6$	$1,19 \times 10^6$	$3,77 \times 10^6$
Geometrical moment of inertia of the profile (Iz)	[mm^4]	$5,9 \times 10^5$	$1,94 \times 10^6$	$9,4 \times 10^6$	$1,08 \times 10^7$	$4,71 \times 10^7$
Friction factor of the guide system (μ)		no guides	no guides	no guides	0,1	0,1
Efficiency of the unit		0,8	0,8	0,8	0,8	0,8
Bending factor (b)		0,0003	0,0003	0,0003	0,0003	0,0003
Inertia of ball screw (jsp)	[kgm^2/m]	$8,46 \times 10^{-5}$	$2,25 \times 10^{-4}$	$6,34 \times 10^{-4}$	$2,25 \times 10^{-4}$	$6,34 \times 10^{-4}$
Dynamic load rating of ball screw (Cx)	[N]					
05 mm lead		10500	12300	21500	12300	21500
10 mm lead		-	13200	33400	13200	33400
20 mm lead		11600	13000	29700	13000	29700
25 mm lead		-	-	14900	-	-
40 mm lead		8400	15400	-	-	14900
50 mm lead					15400	-
Dynamic load rating of ball guide (Cy)	[N]	no guides	no guides	no guides	4 × 13770	4 × 17965
Dynamic load rating of ball guide (Cz)	[N]	no guides	no guides	no guides	4 × 13770	4 × 17965
Distance between ball guide carriages (Lx)	[mm]	no guides	no guides	no guides	163	185
Distance between ball guide carriages (Ly)	[mm]	no guides	no guides	no guides	105	164

Additional Technical Data

Linear Motion Systems with Ball Screw and Slide Guides

Technical Data

Parameter		M55	M75	M100
Geometrical moment of inertia of the profile (Iy)	[mm^4]	$4,27 \times 10^5$	$1,9 \times 10^6$	$5,54 \times 10^6$
Geometrical moment of inertia of the profile (Iz)	[mm^4]	$3,4 \times 10^5$	$1,15 \times 10^6$	$3,86 \times 10^6$
Friction factor of the guide system (μ)		0,15	0,15	0,15
Efficiency ball nut unit composite nut unit		 0,8 0,5	 0,8 0,5	 0,8 0,5
Bending factor (b)		0,0005	0,0005	0,0005
Inertia of ball screw (jsp)	[kgm^2/m]	$4,1 \times 10^{-5}$	$1,6 \times 10^{-4}$	$2,5 \times 10^{-4}$
Dynamic load rating of ball screw (Cx) 05 mm lead 05,8 mm lead 08 mm lead 10 mm lead 12,7 mm lead 20 mm lead 25 mm lead 32 mm lead	[N]	 9300 5420 - 15400 - 1900 - 2000	 10400 - - - 17960 10400 - -	 12500 - - 20600 - - 11800 -

Linear Motion Systems with Belt Drive and Ball Guides

Technical Data

Parameter		WH40	WM60Z	WM80Z	M55	M75	M100	MLSM80Z
Geometrical moment of inertia of the profile (Iy)	[mm^4]	$12,6 \times 10^4$	$5,62 \times 10^5$	$1,85 \times 10^6$	$4,59 \times 10^5$	$1,9 \times 10^6$	$5,54 \times 10^6$	$3,77 \times 10^6$
Geometrical moment of inertia of the profile (Iz)	[mm^4]	$15,3 \times 10^4$	$5,94 \times 10^5$	$1,94 \times 10^6$	$3,56 \times 10^5$	$1,15 \times 10^6$	$3,86 \times 10^6$	$4,71 \times 10^7$
Friction factor of the guide system (μ)		0,05	0,1	0,1	0,02	0,02	0,02	0,1
Efficiency of the unit		0,85	0,85	0,85	0,95	0,95	0,95	0,85
Bending factor (b)		0,0005	0,0005	0,0005	0,0005	0,0005	0,0005	0,0005
Specific mass of belt	[kg/m]	0,032	0,074	0,14	0,09	0,16	0,31	0,517
Inertia of pulleys (Jsyn)	[kgm^2]	$8,8 \times 10^{-6}$	$2,13 \times 10^{-5}$	$1,12 \times 10^{-4}$	$1,7 \times 10^{-5}$	$6,8 \times 10^{-5}$	$8,5 \times 10^{-5}$	$5,077 \times 10^{-4}$
Dynamic load rating of ball guide (Cy)	[N]	2 × 2650	2 × 12964	4 × 18723 (2 × 18723)[1]	2 × 2717	2 × 8206	2 × 13189	4 × 17965
Dynamic load rating of ball guide (Cz)	[N]	2 × 3397	2 × 11934	4 x 13739 (2 x 17919)	2 × 3484	2 × 15484	2 × 24885	4 × 17965
Distance between ball guide carriages (Lx)	[mm]	72	-	154 (-)	78	96	140	185
Distance between ball guide carriages (Ly)	[mm]	-	35	49,75	-	-	-	164

[1] Value in brackets = for short carriage.

Additional Technical Data

Linear Motion Systems with Belt Drive and Slide Guides

Technical Data

Parameter		M50	M55	M75	M100
Geometrical moment of inertia of the profile (Iy)	[mm⁴]	$2,61 \times 10^5$	$4,59 \times 10^5$	$1,9 \times 10^6$	$5,54 \times 10^6$
Geometrical moment of inertia of the profile (Iz)	[mm⁴]	$2,44 \times 10^5$	$3,56 \times 10^5$	$1,15 \times 10^6$	$3,86 \times 10^6$
Friction factor of the guide system (μ)		0,15	0,15	0,15	0,15
Efficiency of the unit		0,85	0,85	0,85	0,85
Bending factor (b)		0,0005	0,0005	0,0005	0,0005
Specific mass of belt	[kg/m]	0,086	0,09	0,16	0,31
Inertia of pulleys (Jsyn)	[kgm²]	$3,1 \times 10^{-5}$	$1,7 \times 10^{-5}$	$6,8 \times 10^{-5}$	$8,5 \times 10^{-5}$

Linear Motion Systems with Belt Drive and Wheel Guides

Technical Data

Parameter		WH50	WH80	WH120	MLSH60Z
Geometrical moment of inertia of the profile (Iy)	[mm⁴]	$3,3 \times 10^5$	$1,93 \times 10^6$	$6,69 \times 10^6$	$1,29 \times 10^6$
Geometrical moment of inertia of the profile (Iz)	[mm⁴]	$2,65 \times 10^5$	$1,8 \times 10^6$	$6,88 \times 10^6$	$1,2 \times 10^7$
Friction factor of the guide system (μ)		0,1	0,1	0,1	0,1
Efficiency of the unit		0,85	0,85	0,85	0,85
Bending factor (b)		0,0005	0,0005	0,0005	0,0005
Specific mass of belt	[kg/m]	0,055	0,21	0,34	0,119
Inertia of pulleys (Jsyn)	[kgm²]	$1,928 \times 10^{-5}$	2.473×10^{-4}	$1,004 \times 10^{-3}$	$4,604 \times 10^{-5}$
Dynamic load rating of wheel guide (Cy)	[N]	-	-	-	4 × 1266
Dynamic load rating of wheel guide (Cz)	[N]	4 × 1270	4 × 3670	4 × 16200	4 × 1266
Distance between carriage wheels (Lx)	[mm]	198	220	180	109
Distance between carriage wheels (Ly)	[mm]	39	65	97	102,5

Additional Technical Data

Linear Lifting Systems

Technical Data

Parameter		WHZ50	WHZ80	Z2	Z3
Geometrical moment of inertia of the profile (Ix)	[mm^4]	-	-	$1{,}87 \times 10^7$	$1{,}87 \times 10^7$
Geometrical moment of inertia of the profile (Iy)	[mm^4]	$3{,}3 \times 10^5$	$1{,}93 \times 10^6$	$2{,}19 \times 10^7$	$2{,}19 \times 10^7$
Geometrical moment of inertia of the profile (Iz)	[mm^4]	$2{,}65 \times 10^5$	$1{,}8 \times 10^6$	-	-
Dynamic load rating of ball screw (Fx)	[N]	belt drive	belt drive	-	-
Dynamic load rating of ball screw (Fz) ball screw ø 25 lead 10 mm ball screw ø 25 lead 25 mm ball screw ø 32 lead 10 mm	[N			 21248 11182 47200	 21248 11182 47200
Friction factor of the guide system (μ)		0,1	0,1	0,15	0,15
Efficiency of the unit		0,85	0,85	0,8	0,8
Specific mass of belt	[kg/m]	0,055	0,119	-	-
Inertia of pulleys (Jsyn)	[kgm^2]	$6{,}906 \times 10^{-5}$	$5{,}026 \times 10^{-4}$	-	-
Inertia of ball screw (jsp) ball screw ø 25 lead 10 ball screw ø 25 lead 25 ball screw ø 32 lead 10	[kgm^2/m]	 - - -	 - - -	 $2{,}1 \times 10^{-4}$ $2{,}6 \times 10^{-4}$ $6{,}43 \times 10^{-4}$	 $2{,}1 \times 10^{-4}$ $2{,}6 \times 10^{-4}$ $6{,}43 \times 10^{-4}$
Dynamic load rating of ball guide (Cx)	[N]	-	-	slide guide	slide guide
Dynamic load rating of ball guide (Cy)	[N]	4 × 1270	4 × 3670	slide guide	slide guide
Distance between ball guide carriages (Lx)	[mm]	198	220	-	-
Distance between ball guide carriages (Ly)	[mm]	39	65	slide guide	slide guide
Distance between ball guide carriages (Lz)	[mm]	-	-	slide guide	slide guide
Definition of forces		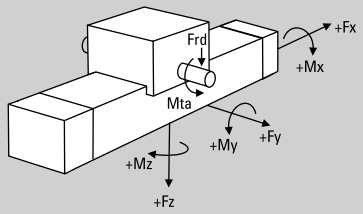		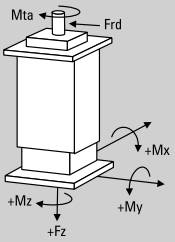	

Additional Technical Data

Linear Rod Units

Technical Data

Parameter		WZ60	WZ80
Geometrical moment of inertia of the profile (Iy)	[mm^4]	$5,8 \times 10^5$	$1,85 \times 10^6$
Geometrical moment of inertia of the profile (Iz)	[mm^4]	$5,9 \times 10^5$	$1,94 \times 10^6$
Friction factor of the guide system (μ)		0,1	0,1
Efficiency of the unit		0,8	0,8
Inertia of ball screw (jsp)	[kgm^2/m]		
05 mm lead		$8,46 \times 10^{-5}$	$2,25 \times 10^{-4}$
10 mm lead		-	$2,25 \times 10^{-4}$
20 mm lead		$8,46 \times 10^{-5}$	$2,25 \times 10^{-4}$
25 mm lead		-	-
32 mm lead		-	-
40 mm lead		-	-
50 mm lead		$8,46 \times 10^{-5}$	$2,25 \times 10^{-4}$
Dynamic load rating of ball screw (Cx)	[N]		
05 mm lead		10500	12300
10 mm lead		-	13200
20 mm lead		11600	13000
25 mm lead		-	-
32 mm lead		-	-
40 mm lead		-	-
50 mm lead		8400	15400
Dynamic load rating of ball guide (Cy)	[N]	2 × 12964	2 × 18723
Dynamic load rating of ball guide (Cz)	[N]	2 × 11943	2 × 17919
Distance between ball guide carriages (Lx)	[mm]	-	-
Distance between ball guide carriages (Ly)	[mm]	35	50
Dynamic rating of the ball bushing	[N]	8300	13700

Drive Calculations

Screw Driven Linear Motion Systems

Feed Force Formula [N]

$$F_x = m \times g \times \mu$$

F_x = feed force [N]
m = total mass to be moved [kg] [1]
g = acceleration due to gravity [m/s²]
μ = friction factor specific for each unit

Acceleration Force Formula [N]

$$F_a = m \times a$$

F_a = acceleration force [N]
m = mass to be operated [kg]
a = acceleration [m/s²) [2]

Power Formula [kW]

$$P = \frac{M_A \times n_{max} \times 2 \times 3{,}14}{60 \times 1000}$$

P = required power [kW]
M_A = required drive moment [Nm]
n_{max} = maximum required rotational speed [rpm]

Drive Moment Formulas [Nm]

$$M_A = M_{load} + M_{trans} + M_{rot} + M_{idle}$$

$$M_{load} = \frac{F_x \times p}{2 \times 3{,}14 \times 1000}$$

$$M_{trans} = \frac{F_a \times p}{2 \times 3{,}14 \times 1000}$$

$$M_{rot} = j_{sp} \times \frac{2 \times 3{,}14 \times n_{max} \times a \times 2}{V_{max} \times 60 \times 1000}$$

M_{idle} = see table for unit in question

M_A = required drive moment [Nm]
M_{load} = moment as a result of various loads [N]
M_{trans} = translational acceleration moment [Nm]
M_{rot} = rotational acceleration moment [Nm]
M_{idle} = carriage/rod idle torque [Nm] [3]
F_x = feed force [N]
p = screw lead [mm]
F_a = maximum required acceleration force [N]
j_{sp} = inertia of ball screw per meter [kgm²/m] [4]
n_{max} = maximum required rotational speed [rpm]
a =maximum required acceleration [m/s²)
V_{max} = maximum required linear speed [m/s]

[1] The total mass is the mass of all masses to be moved (objects to be moved, carriage(s)/rod, screw).

[2] In vertical applications, the mass acceleration must be added to the acceleration due to gravity g (9,81 m/s²).

[3] This value can be found in the carriage idle torque tables for each linear motion system.

[4] This value can be found in the additional technical data tables.

Drive Calculations

Belt Driven Linear Motion Systems

Feed Force Formula [N]

$$F_x = m \times g \times \mu$$

F_x = feed force [N]
m = total mass to be moved [kg] [1]
g = acceleration due to gravity [m/s²]
μ = friction factor specific for each unit

Acceleration Force Formula [N]

$$F_a = m \times a$$

F_a = acceleration force [N]
m = mass to be operated [kg]
a = acceleration [m/s²] [2]

Power Formula [kW]

$$P = \frac{M_A \times n_{max} \times 2 \times 3{,}14}{60 \times 1000}$$

P = required power [kW]
M_A = required drive moment [Nm]
n_{max} = maximum required rotational speed [rpm]

Drive Moment Formulas [Nm]

$$M_A = M_{load} + M_{trans} + M_{rot} + M_{idle}$$

$$M_{load} = \frac{F_x \times d_o}{1000 \times 2}$$

$$M_{trans} = \frac{F_a \times d_o}{1000 \times 2}$$

$$M_{rot} = J_{syn} \times \frac{2 \times 3{,}14 \times n_{max}}{60} \times \frac{a}{V_{max}}$$

M_{idle} = see table for unit in question

M_A = required drive moment [Nm]
M_{load} = moment as a result of various loads [N]
M_{trans} = translational acceleration moment [Nm]
M_{rot} = rotational acceleration moment [Nm]
M_{idle} = carriage/rod idle torque [Nm] [3]
F_x = feed force [N]
d_o = pulley diameter [mm] [4]
F_a = maximum required acceleration force [N]
J_{syn} = idle torque of pulleys [kgm²] [5]
n_{max} = maximum required rotational speed [rpm]
a = maximum required acceleration [m/s²]
V_{max} = maximum required linear speed [m/s]

[1] The total mass is the mass of all masses to be moved (objects to be moved, carriage(s)/rod, belt).

[2] In vertical applications, the mass acceleration must be added to the acceleration due to gravity g (9,81 m/s²).

[3] This value can be found in the carriage idle torque tables.

[4] This value can be found in the performance specifications tables for each linear motion system.

[5] This value can be found in the additional technical data tables.

Deflection Calculations

How to calculate the deflection of the profile

Load Cases

1.

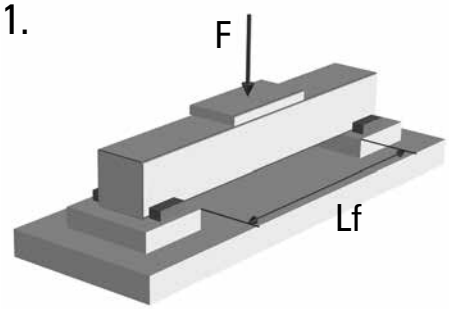

Profile supported in both ends.
Profile fixed at both sides.

2.

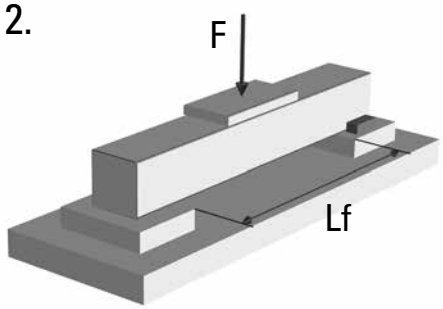

Profile supported in both ends.
Profile fixed at one side.

3.

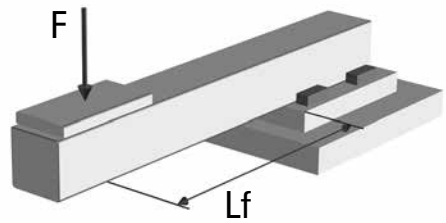

Profile supported in one end.
Profile fixed at one side.

Permissible Profile Deflection Formula [mm]

$$f_h = L_f \times b$$

f_h = permissible profile deflection [mm]

L_f = length of profile being bent [mm]

b = bending factor [1]

Profile Deflection Formulas [mm]

Load Case 1.

$$f_{max} = \frac{m'_{100} \times g \times L_f^4}{100 \times 384 \times E_{Al} \times I_y} + \frac{(m_{ext} + m_c) \times g \times L_f^3}{192 \times E_{Al} \times I_y}$$

Load Case 2.

$$f_{max} = \frac{m'_{100} \times g \times L_f^4}{100 \times 185 \times E_{Al} \times I_y} + \frac{(m_{ext} + m_c) \times g \times L_f^3}{48 \times \sqrt{5} \times E_{Al} \times I_y}$$

Load Case 3.

$$f_{max} = \frac{m'_{100} \times g \times L_f^4}{100 \times 8 \times E_{Al} \times I_y} + \frac{(m_{ext} + m_c) \times g \times L_f^3}{3 \times E_{Al} \times I_y}$$

f_{max} = deflection of the profile [mm]

m'_{100} = weight of every 100 mm of stroke [kg/mm]

m_{ext} = external load on carriage [kg]

m_c = weight of carriage(s) [kg] [2]

g = acceleration due to gravity [m/s^2]

E_{Al} = elastic modulus of aluminum (70000 N/mm^2)

I_y = geometrical moment of inertia of the profile in Y direction [mm^4] [1]

[1] This value can be found in the additional technical data tables.

[2] This value can be found in the performance specifications tables for each unit.

Conclusion Formulas

$f_h > f_{max}$ = deflection OK

$f_h < f_{max}$ = deflection not OK, L_f must be shorter

Deflection Calculations

Examples of calculations of the profile deflection

Example 1

Type of linear motion system:
WH80

Load case:
Case 1 - profile supported in both ends and fixed at both sides.

Load to be moved by carriage:
m_{ext} = 150 kg

Distance between supports:
L_f = 600 mm

Specific unit data:
m'_{100} = 0,93 kg
m_c = 2,75 kg
E_{Al} = 70000 N/mm^2
I_y = 1,93 × 10^6 mm^4
b = 0,0005

Calculated values:
f_h = 0,3 mm
f_{max} = 0,013 mm

Conclusion:
$f_h > f_{max}$ = deflection OK

Example 2

Type of linear motion system:
M55 (MF06B)

Load case:
Case 2 - profile supported in both ends and fixed at one side.

Load to be moved by carriage:
m_{ext} = 100 kg

Distance between supports:
L_f = 600 mm

Specific unit data:
m'_{100} = 0,53 kg
m_c = 1,2 kg
E_{Al} = 70000 N/mm^2
I_y = 4,59 × 10^5 mm^4
b = 0,0005

Calculated values:
f_h = 0,3 mm
f_{max} = 0,063 mm

Conclusion:
$f_h > f_{max}$ = deflection OK

Example 3

Type of linear motion system:
WM80

Load case:
Case 3 - profile supported and fixed at one end.

Load to be moved by carriage:
m_{ext} = 120 kg

Distance between supports:
L_f = 400 mm

Specific unit data:
m'_{100} = 1,08 kg
m_c = 4,26 kg
E_{Al} = 70000 N/mm^2
I_y = 1,85 × 10^6 mm^4
b = 0,0003

Calculated values:
f_h = 0,12 mm
f_{max} = 0,203 mm

Conclusion:
$f_h > f_{max}$ = deflection <u>not</u> OK

Ordering Keys

Linear Motion Systems with Ball Screw Drive and Ball Guides

WM40S, WM40D, WM60S, WM60D, WM60X, WM80S, WM80D, WM120D

Your Code								
	1	2	3	4	5	6	7	8
Example	WM06D	020	-02545	-03715	A	Z	-0520	S1

1. Type of unit
WM04S = WM40S unit with single ball nut
WM04D = WM40D unit with double ball nuts
WM06S = WM60S unit with single ball nut
WM06D = WM60D unit with double ball nuts
WM06X = WM60X unit with left/right screw
WM08S = WM80S unit with single ball nut
WM08D = WM80D unit with double ball nuts
WM12D = WM120D unit with double ball nuts

2. Screw lead[1]
005 = 5 mm
010 = 10 mm
020 = 20 mm
040 = 40 mm
050 = 50 mm

3. Maximum stroke (Smax)
- • • • • • = distance in mm

4. Total length of unit (L tot)
- • • • • • = distance in mm

5. Drive shaft configuration[2]
A = single shaft without key way
C = single shaft with key way
G = double shafts, first without key way and second for encoder
I = double shafts, first with key way and second for encoder[3]

6. Type of carriage[4]
N = single standard carriage
S = single short carriage
L = single long carriage
Z = double standard carriages
Y = double short carriages
M = double long carriages

7. Distance between double carriages
- 0000 = always for single carriages
- • • • • = distance in mm

8. Protection option[5]
S1 = wash down protection (not available for WM04 units)

[1] See table below for available combinations of units and ball screw leads.

Type of unit	Available screw leads [mm]				
	5	10	20	40	50
WM04S	x				
WM04D	x				
WM06S	x		x		x
WM06D	x		x		x
WM06X	x				
WM08S	x	x	x		x
WM08D	x	x	x		x
WM12D	x	x	x	x	

[2] See below for the definition of shafts.

Single Double

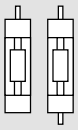

[3] Drive shaft configuration I not available for WM 40.

[4] See table below for available combinations of units and carriage types.

Type of unit	Available carriage types					
	N	S	L	Z	Y	M
WM04S	x			x		
WM04D			x			x
WM06S		x			x	
WM06D	x		x	x		
WM06X	x	x	x			
WM08S		x			x	
WM08D	x		x	x		
WM12D	x		x	x		

[5] Leave position blank if no additional protection is required.

Note! for ordering of options type EN, ES, KRG, RT, ADG and MGK, see accessory index on page 131.

Ordering Keys

Linear Motion Systems with Ball Screw Drive and No Guides

WV60, WV80, WV120

Your Code								
	1	2	3	4	5	6	7	8
Example	WV08D	020	-02745	-03295	G	N	-0000	

1. Type of unit
WV06D = WV60 unit
WV08D = WV80 unit
WV12D = WV120 unit

2. Ball screw lead[1]
005 = 5 mm
010 = 10 mm
020 = 20 mm
040 = 40 mm
050 = 50 mm

3. Maximum stroke (Smax)
- •••••= distance in mm

4. Total length of unit (L tot)
- •••••= distance in mm

5. Drive shaft configuration[2]
A = single shaft without key way
C = single shaft with key way
G = double shafts, first without key way and second for encoder
I = double shafts, first with key way and second for encoder

6. Type of carriage
N = single standard carriage

7. Distance between double carriages
- 0000 = always for single carriages

8. Protection option[3]
S1 = wash down protection

[1] See table below for available combinations of units and ball screw leads.

Type of unit	Available screw leads [mm]				
	5	10	20	40	50
WV60	x		x		x
WV80	x	x	x		x
WV120	x	x	x	x	

[2] See below for the definition of shafts.

Single Double

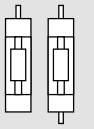

[3] Leave position blank if no additional protection is required.

Note! for ordering of options type EN, ES, KRG, RT, ADG and MGK, see accessory index on page 131.

Ordering Keys

Linear Motion Systems with Lead or Ball Screw Drive and Ball Guides

MLSM60D, MLSM80D

Your Code							
	1	2	3	4	5	6	7
Example	MLSM06D	020	-03800	-04645	C	L	-0000

1. Type of unit
MLSM06D = MLSM60 unit
MLSM08D = MLSM80 unit

2. Ball screw lead
005 = 5 mm
010 = 10 mm
020 = 20 mm
040 = 40 mm
050 = 50 mm

3. Maximum stroke (Smax)
- • • • • • = distance in mm

4. Total length of unit (L tot)
- • • • • • = distance in mm

5. Drive shaft configuration[2]
A = single shaft without key way
C = single shaft with key way
G = double shafts, first without key way and second for encoder
I = double shafts, first with key way and second for encoder

6. Carriage configuration
N = single standard carriage
L = single long carriage
Z = double standard carriages

7. Distance between double carriages
- 0000 = always for single carriages
- • • • • = distance in mm

[1] See table below for available combinations of units and ball screw leads.

Type of unit	Available screw leads [mm]				
	5	10	20	40	50
MLSM06D	x		x		x
MLSM08D	x	x	x	x	

[2] See below for the definition of shafts.

Single Double

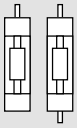

Ordering Keys

Linear Motion Systems with Ball Screw Drive and Ball Guides

M55, M75, M100

Your Code							
	1	2	3	4	5	6	7
Example	MF07	K057	C	35	S	305	+S1

1. Type of unit
MF06 = M55 unit
MF07 = M75 unit
MF10 = M100 unit

2. Ball screw type, lead and tolerance class[2]
K057 = ball nut, 5 mm, T7
K107 = ball nut, 10 mm, T7
K129 = ball nut, 12,7 mm, T9
K207 = ball nut, 20 mm, T7
K257 = ball nut, 25 mm, T7

3. Type of carriages
A = single standard carriage
C = double standard carriages

4. Distance between carriages (Lc)
00 = for all single standard carriage units
•• = distance in cm between carriages

5. Screw supports
X = no screw supports
S = single screw supports
D = double screw supports

6. Ordering length (L order)
••• = distance in cm

7. Protection option[1]
+S1 = S1 wash down protection

[1] Leave position blank if no additional protection is required.
[2] See table below for available combinations of units and ball screw type, lead and tolerance.

Ball screw type	Type of unit		
	M55	M75	M100
K057	x	x	x
K107	x		x
K129		x	
K207	x	x	
K257			x

Ordering Keys

Linear Motion Systems with Lead or Ball Screw Drive and Ball Guides

2HB10, 2HB20

Your Code											
	1	2	3	4	5	6	7	8	9	10	11
Example	2HB10	HO	N1285	-038	N	001	A	0	A	0	0

1. Type of unit
2HB10 = 2HB10 unit
2HB20 = 2HB20 unit

2. Ball screw diameter, lead and nut type
GO = 16 mm, 5 mm, preloaded (2HB10 only)
HO = 16 mm, 10 mm, preloaded (2HB10 only)

LO = 25 mm, 5 mm, preloaded (2HB20 only)
MO = 25 mm, 10 mm, preloaded(2HB20 only)
NO = 25 mm, 25 mm, preloaded (2HB20 only)

3. Ordering length (L)
N • • • • = distance in mm

4. Y-distance
- 038 = standard distance in mm between motor end plate to first set of mounting holes on 2HB10
- 043 = standard distance in mm between motor end plate to first set of mounting holes on 2HB20
- • • • = custom distance in mm between motor end plate to first set of mounting holes

5. Brake option
N = no brake
B = brake

6. Motor flange ID
001 = NEMA 23
002 = NEMA 34
• • • = consult www.linearmotioneering.com for complete list of available standard motor flanges

7. Ball guide rail coating option
A = standard
D = duralloy

8. Ball guide carriage coating option
0 = standard
1 = duralloy

9. Profile cover option
A = none
B = bellows (bellows will reduce stroke length app. 28%)
C = shrouds

10. Hardware option
0 = alloy plated
1 = stainless steel

11. Home and end of stroke sensor option
0 = no sensors
1 = home sensor, NPN type
2 = end of stroke sensors, NPN type
3 = home and end of stroke sensors, NPN type
4 = home sensor, PNP type
5 = end of stroke sensors, PNP type
6 = home and end of stroke sensors, PNP type

Ordering Keys

Linear Motion Systems with Lead or Ball Screw Drive and Ball Guides

2RB12, 2RB16

Your Code											
	1	2	3	4	5	6	7	8	9	10	11
Example	2RB16	JO	N1000	-100	N	002	B	0	A	0	0

1. Type of unit
2RB12 = 2RB12 unit
2RB16 = 2RB16 unit

2. Ball screw diameter, lead and nut type
GO = 16 mm, 5 mm, preloaded (2RB12 only)
HO = 16 mm, 10 mm, preloaded (2RB12 only)

IO = 20 mm, 5 mm, preloaded (2RB16 only)
JO = 20 mm, 10 mm, preloaded (2RB16 only)
KO = 20 mm, 25 mm, preloaded (2RB16 only)

3. Ordering length (L)
N •••• = distance in mm

4. Y-distance
- 075 = standard distance in mm between motor end plate to first set of mounting holes on 2RB12
- 100 = standard distance in mm between motor end plate to first set of mounting holes on 2RB16
- ••• = custom distance in mm between motor end plate to first set of mounting holes

5. Brake option
N = no brake
B = brake

6. Motor flange ID
001 = NEMA 23
002 = NEMA 34
••• = consult www.linearmotioneering.com for complete list of available standard motor flanges

7. Ball guide shaft coating option
A = standard, 60 Case
B = stainless steel (440C)
C = chrome plated
E = armoloy

8. Bearing option
0 = standard
1 = corrosion resistance

9. Profile cover option
A = none
B = bellows (bellows will reduce stroke length app. 28%)

10. Hardware option
0 = alloy plated
1 = stainless steel

11. Home and end of stroke sensor option
0 = no sensors
1 = home sensor, NPN type
2 = end of stroke sensors, NPN type
3 = home and end of stroke sensors, NPN type
4 = home sensor, PNP type
5 = end of stroke sensors, PNP type
6 = home and end of stroke sensors, PNP type

Ordering Keys

Linear Motion Systems with Lead or Ball Screw Drive and Ball Guides

MS25, MS33

Your Code											
	1	2	3	4	5	6	7	8	9	10	11
Example	MS25	LC	N0300	-056	N	505	A	0	A	0	0

1. Type of unit
MS25 = MS25 unit
MS33 = MS33 unit

2. Lead screw diameter, lead and nut type
LA = MS25, 0,25 inch, 0,025 in, preloaded
LB = MS25, 0,25 inch, 0,050 in, preloaded
LC = MS25, 0,25 inch, 0,062 in, preloaded
LD = MS25, 0,25 inch, 0,200 in, preloaded
LE = MS25, 0,25 inch, 0,250 in, preloaded
LF = MS25, 0,25 inch, 0,500 in, preloaded
LG = MS25, 0,25 inch, 1,000 in, preloaded
LH = MS25, 0,25 inch, 1,5 mm, preloaded
LI = MS25, 0,25 inch, 2,0 mm, preloaded
LJ = MS25, 0,25 inch, 3,0 mm, preloaded

LA = MS33, 0,375 inch, 0,0625 in, preloaded
LB = MS33, 0,375 inch, 0,100 in, preloaded
LC = MS33, 0,375 inch, 0,125 in, preloaded
LD = MS33, 0,375 inch, 0,200 in, preloaded
LE = MS33, 0,375 inch, 0,250 in, preloaded
LF = MS33, 0,375 inch, 0,375 in, preloaded
LG = MS33, 0,375 inch, 0,500 in, preloaded
LH = MS33, 0,375 inch, 1,000 in, preloaded
LI = MS33, 0,375 inch, 1,200 in, preloaded
LJ = MS33, 0,375 inch, 2,0 mm, preloaded

3. Ordering length (L)
N •••• = distance in mm

4. Y-distance
- 045 = standard distance in mm between motor end plate to first set of mounting holes on MS25
- 055 = standard distance in mm between motor end plate to first set of mounting holes on MS33
- ••• = custom distance in mm between motor end plate to first set of mounting holes

5. Brake option
N = no brake (standard)

6. Motor flange ID [1]
505 = NEMA 17
001 = NEMA 23
••• = consult www.linearmotioneering.com for complete list of available standard motor flanges

7. Linear guides shafting option
A = 60 case (1566)
B = stainless steel (440C)
C = chrome plated

8. Bearing type option
0 = standard
1 = corrosion resistant

9. Profile cover option
A = none
B = bellows (bellows will reduce stroke length app. 28%)

10. Hardware option
0 = alloy plated
1 = stainless steel

11. Home and end of stroke limit switch option
7 = home position limit switch
8 = end of stroke limit switches

Ordering Keys

Linear Motion Systems with Lead or Ball Screw Drive and Ball Guides

2DB08, 2DB12, 2DB16

Your Code											
	1	2	3	4	5	6	7	8	9	10	11
Example	2DB12	FO	N0250	-300	N	002	A	0	A	0	0

1. Type of unit
2DB08 = 2DB08 unit
2DB12 = 2DB12 unit
2DB16 = 2DB16 unit

2. Screw type, diameter, lead and nut type
AO = leadscrew, 0.375 in, 0.100 in, preloaded (2DB08 only)
BO = leadscrew, 0.375 in, 0.250 in, preloaded (2DB08 only)
CO = leadscrew, 0.375 in, 0.500 in, preloaded (2DB08 only)
D0 = leadscrew, 0.375 in, 0.750 in, preloaded (2DB08 only)
E0 = leadscrew, 0.375 in, 1.000 in, preloaded (2DB08 only)

FO = ballscrew, 0.631 in, 0.200 in, non-preloaded (2DB12 only)
VO = ballscrew, 0.631 in, 0.200 in, preloaded (2DB12 only)
QJ = ballscrew, 0.500 in, 0.500 in, preloaded (2DB12 only)

GO = ballscrew, 0.750 in, 0.200 in, non-preloaded (2DB16 only)
WO = ballscrew, 0.750 in, 0.200 in, preloaded (2DB16 only)
RJ = ballscrew, 0.750 in, 0.500 in, preloaded (2DB16 only)
LJ = ballscrew, 0.631 in, 1.0 in, preloaded (2DB16 only)
DO = ballscrew, 20 mm, 5 mm, preloaded (2DB16 only)

3. Ordering length (L)
N •••• = distance in inch (e.g. 0250 = 25 inch)

4. Y-distance
- 200 = standard distance in inch between motor end plate to first set of mounting holes for 2DB08 (e.g. 200 = 2 in)
- 300 = standard distance in inch between motor end plate to first set of mounting holes for 2DB12 and 2DB16 (e.g. 300 = 3 in)
- ••• = custom distance in inch between motor end plate to first set of mounting holes

5. Brake option
N = no brake
B = brake

6. Motor flange ID
001 = NEMA 23
002 = NEMA 34
••• = consult www.linearmotioneering.com for complete list of available standard motor flanges

7. Ball guide shaft coating option
A = standard, 60 Case
B = stainless steel (440C)
C = chrome plated
E = armoloy

8. Bearing option
0 = standard
1 = corrosion resistance

9. Profile cover option
A = none
B = bellows (bellows will reduce stroke length app. 28%)

10. Hardware option
0 = alloy plated
1 = stainless steel

11. Home and end of stroke sensor option
0 = no sensors
7 = home
8 = ends of travel
9 = both

Ordering Keys

Linear Motion Systems with Ball Screw Drive and Slide Guides

M55, M75, M100

Your Code							
	1	2	3	4	5	6	7
Example	MG07	K057	C	35	S	305	+S1

1. Type of unit
MG06 = M55 unit
MG07 = M75 unit
MG10 = M100 unit

2. Ball screw type, lead and tolerance class[2]
K057 = ball nut, 5 mm, T7
K107 = ball nut, 10 mm, T7
K129 = ball nut, 12,7 mm, T9
K207 = ball nut, 20 mm, T7
K257 = ball nut, 25 mm, T7

3. Type of carriages
A = single standard carriage
C = double standard carriages

4. Distance between carriages (Lc)
00 = for all single standard carriage units
•• = distance in cm between carriages

5. Screw supports
X = no screw supports
S = single screw supports
D = double screw supports

6. Ordering length (L order)
••• = distance in cm

7. Protection option[1]
+S1 = S1 wash down protection

[1] Leave position blank if no additional protection is required.
[2] See table below for available combinations of units and ball screw type, lead and tolerance.

Ball screw type	Type of unit		
	M55	M75	M100
K057	x	x	x
K107	x		x
K129		x	
K207	x	x	
K257			x

Ordering Keys

Linear Motion Systems with Belt Drive and Ball Guides

WH40						
Your Code						
	1	2	3	4	5	6
Example	WH04Z100	-01400	-01755	H	L	-0400

1. Type of unit
WH04Z100 = WH40 unit

2. Maximum stroke (Smax)
- • • • • • = distance in mm

3. Total length of unit (L tot)
- • • • • • = distance in mm

4. Drive shaft configuration[1]
A = shaft on left side without key way
B = shaft on right side without key way
C = shaft on left side with key way
D = shaft on right side with key way
E = shaft on left side without key way and shaft on right side with key way
F = shaft on left side with key way and shaft on right side without key way
G = shaft on left side without key way and shaft on right side for encoder
H = shaft on left side for encoder and shaft on right side without key way
I = shaft on left side with key way and shaft on right side for encoder
J = shaft on left side for encoder and shaft on right side with key way
L = shaft on both sides without key way
M = shaft on both sides with key way
W = hollow shaft on both sides with clamping unit

5. Carriage configuration
N = single standard carriage
L = single long carriage
Z = double standard carriages

6. Distance between double carriages
- 0000 = always for single carriages
- • • • • = distance in mm

[1] See below for the definition of shafts.

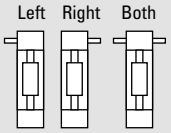

Note! for ordering of options type EN, ES, KRG, RT, ADG and MGK, see accessory index on page 131.

Ordering Keys

Linear Motion Systems with Belt Drive and Ball Guides

WM60Z, WM80Z

Your Code						
	1	2	3	4	5	6
Example	WM08Z170	-02545	-03715	D	L	-0000

1. Type of unit
WM06Z120 = WM60Z unit
WM08Z170 = WM80Z unit

2. Maximum stroke (Smax)
- • • • • • = distance in mm

3. Total length of unit (L tot)
- • • • • • = distance in mm

4. Drive shaft configuration[1]
A = shaft on left side without key way
B = shaft on right side without key way
C = shaft on left side with key way
D = shaft on right side with key way
E = shaft on left side without key way and shaft on right side with key way
F = shaft on left side with key way and shaft on right side without key way
G = shaft on left side without key way and shaft on right side for encoder
H = shaft on left side for encoder and shaft on right side without key way
I = shaft on left side with key way and shaft on right side for encoder
J = shaft on left side for encoder and shaft on right side with key way
L = shaft on both sides without key way
M = shaft on both sides with key way
V = hollow shaft on both sides for Micron DT/DTR planetary gear option

5. Carriage configuration[2]
N = single standard carriage
S = single short carriage
L = single long carriage
Z = double standard carriages
Y = double short carriages

6. Distance between double carriages
- 0000 = always for single carriages
- • • • • = distance in mm

[1] See below for the definition of shafts.

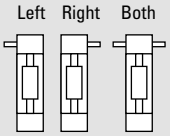

[2] See table below for available combinations of units and carriage types.

Type of unit	Available carriage types				
	N	S	L	Z	Y
WM06Z		x			x
WM08Z	x	x	x	x	x

Ordering Keys

Linear Motion Systems with Belt Drive and Ball Guides

M55, M75, M100

Your Code						
	1	2	3	4	5	6
Example	MF06B105	A	00	X	450	+S1

1. Type of unit
MF06B105 = M55 unit
MF07B130 = M75 unit
MF10B176 = M100 unit

2. Type of carriages
A = single standard carriage
C = double standard carriages

3. Distance between carriages (Lc)
00 = for all single standard carriage units
•• = distance in cm between carriages

4. Drive shaft configuration
R = shaft on the side as shown in picture
Q = shaft on the side as shown in picture
X = shaft on both sides

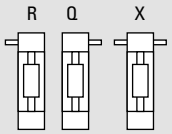

5. Ordering length (L order)
••• = distance in cm

6. Protection option[1]
+S1 = S1 wash down protection

[1] Leave blank if no protection option required.

Ordering Keys

Linear Motion Systems with Belt Drive and Ball Guides

MLSM80Z						
Your Code						
	1	2	3	4	5	6
Example	MLSM08Z200	-05000	-05570	A	N	-0000

1. Type of unit
MLSM08Z200 = MLSM80 unit

2. Maximum stroke (Smax)
- • • • • • = distance in mm

3. Total length of unit (L tot)
- • • • • • = distance in mm

4. Drive shaft configuration[1]
A = shaft on left side without key way
B = shaft on right side without key way
C = shaft on left side with key way
D = shaft on right side with key way
E = shaft on left side without key way and shaft on right side with key way
F = shaft on left side with key way and shaft on right side without key way
G = shaft on left side without key way and shaft on right side for encoder
H = shaft on left side for encoder and shaft on right side without key way
I = shaft on left side with key way and shaft on right side for encoder
J = shaft on left side for encoder and shaft on right side with key way
L = shaft on both sides without key way
M = shaft on both sides with key way

5. Carriage configuration
N = single standard carriage
L = single long carriage
Z = double standard carriages

6. Distance between double carriages
- 0000 = always for single carriages
- • • • • = distance in mm

[1] See below for the definition of shafts.

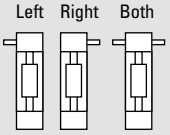

Ordering Keys

Linear Motion Systems with Belt Drive and Slide Guides

M50

Your Code				
	1	2	3	4
Example	MG05B130	A00	R	560

1. Type of unit
MG05B130 = M50 unit

2. Type of carriage
A00 = single standard carriage

3. Drive shaft configuration
R = shaft on the side as shown in picture
Q = shaft on the side as shown in picture
X = shaft on both sides

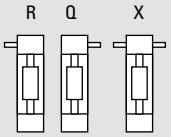

4. Ordering length (L order)
••• = distance in cm

M55, M75, M100

Your Code						
	1	2	3	4	5	6
Example	MG06B105	A	00	X	450	+S2

1. Type of unit
MG06B105 = M55 unit
MG07B130 = M75 unit
MG10B176 = M100 unit

2. Type of carriages
A = single standard carriage
C = double standard carriages

3. Distance between carriages (Lc)
00 = for all single standard carriage units
•• = distance in cm between carriages

4. Drive shaft configuration
R = shaft on the side as shown in picture
Q = shaft on the side as shown in picture
X = shaft on both sides

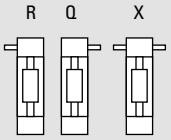

5. Ordering length (L order)
••• = distance in cm

6. Protection option[1]
+S1 = S1 wash down protection
+S2 = S2 enhanced wash down protection

[1] Leave blank if no protection option required.

Ordering Keys

Linear Motion Systems with Belt Drive and Wheel Guides

WH50, WH80, WH120

Your Code							
	1	2	3	4	5	6	7
Example	WH08Z200	-02300	-02710	J	L	-0000	S1

1. Type of unit
WH05Z120 = WH50 unit
WH08Z200 = WH80 unit
WH12Z260 = WH120 unit

2. Maximum stroke (Smax)
- • • • • • = distance in mm

3. Total length of unit (L tot)
- • • • • • = distance in mm

4. Drive shaft configuration[1]
A = shaft on left side without key way
B = shaft on right side without key way
C = shaft on left side with key way
D = shaft on right side with key way
E = shaft on left side without key way and shaft on right side with key way
F = shaft on left side with key way and shaft on right side without key way
G = shaft on left side without key way and shaft on right side for encoder
H = shaft on left side for encoder and shaft on right side without key way
I = shaft on left side with key way and shaft on right side for encoder
J = shaft on left side for encoder and shaft on right side with key way
K = hollow shaft on both sides without clamping unit
L = shaft on both sides without key way
M = shaft on both sides with key way
V = hollow shaft on both sides for Micron DT/DTR planetary gear option
W = hollow shaft on both sides with clamping unit

7. Protection option[2]
S1 = wash down protection

5. Carriage configuration
N = single standard carriage
L = single long carriage
Z = double standard carriages

6. Distance between double carriages
- 0000 = always for single carriages
- • • • • = distance in mm

[1] See below for the definition of shafts.

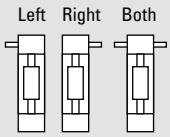

[2] Leave position blank if no additional protection is required.

Note! for ordering of options type EN, ES, KRG, RT, ADG and MGK, see accessory index on page 131.

Ordering Keys

Linear Motion Systems with Belt Drive and Wheel Guides

MLSH60Z

Your Code						
	1	2	3	4	5	6
Example	MLSH06Z135	-04500	-05580	D	Z	-0600

1. Type of unit
MLSH06Z135 = MLSH60 unit

2. Maximum stroke (Smax)
- • • • • • = distance in mm

3. Total length of unit (L tot)
- • • • • • = distance in mm

4. Drive shaft configuration[1]
A = shaft on left side without key way
B = shaft on right side without key way
C = shaft on left side with key way
D = shaft on right side with key way
E = shaft on left side without key way and shaft on right side with key way
F = shaft on left side with key way and shaft on right side without key way
G = shaft on left side without key way and shaft on right side for encoder
H = shaft on left side for encoder and shaft on right side without key way
I = shaft on left side with key way and shaft on right side for encoder
J = shaft on left side for encoder and shaft on right side with key way
L = shaft on both sides without key way
M = shaft on both sides with key way

5. Carriage configuration
N = single standard carriage
L = single long carriage
Z = double standard carriages

6. Distance between double carriages
- 0000 = always for single carriages
- • • • • = distance in mm

[1] See below for the definition of shafts.

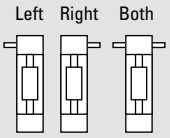

Ordering Keys

Linear Lifting Units

WHZ50, WHZ80

Your Code							
	1	2	3	4	5	6	7
Example	WHZ05Z120	-01000	-01410	A	N	-0000	

1. Type of unit
WHZ05Z120 = WHZ50 unit
WHZ08Z200 = WHZ80 unit

2. Maximum stroke (Smax)
- • • • • • = distance in mm

3. Total length of unit (L tot)
- • • • • • = distance in mm

4. Drive shaft configuration[1]
A = shaft on left side without key way
B = shaft on right side without key way
C = shaft on left side with key way
D = shaft on right side with key way
E = shaft on left side without key way and shaft on right side with key way
F = shaft on left side with key way and shaft on right side without key way
G = shaft on left side without key way and shaft on right side for encoder
H = shaft on left side for encoder and shaft on right side without key way
I = shaft on left side with key way and shaft on right side for encoder
J = shaft on left side for encoder and shaft on right side with key way
L = shaft on both sides without key way
M = shaft on both sides with key way
V = hollow shaft on both sides for Micron DT/DTR planetary gear option
W = hollow shaft on both sides with clamping unit

5. Carriage configuration
N = single standard carriage
L = single long carriage
Z = double standard carriages

6. Distance between double carriages
- 0000 = always for single carriages
- • • • • = distance in mm

7. Protection option[2]
S1 = wash down protection

[1] See below for the definition of shafts and up and down.

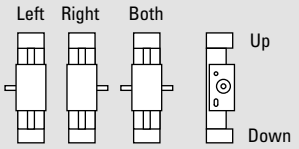

[2] Leave position blank if no additional protection is required.

Note! for ordering of options type EN, ES, KRG, RT, ADG and MGK, see accessory index on page 131.

Z2, Z3

Your Code				
	1	2	3	4
Example	MGZ3K	25259	-250	450

1. Type of unit
MGZ2K = Z2 unit
MGZ3K = Z3 unit

2. Ball screw diameter, lead and tolerance class
25109 = 25 mm, 10 mm, T9
25259 = 25 mm, 25 mm, T9
32207 = 32 mm, 20 mm, T7

3. Minimum retracted length (L min)
- • • • = distance in cm

4. Maximum extended length (L max)
• • • = distance in cm

Ordering Keys

Linear Rod Units

WZ60, WZ80

Your Code						
	1	2	3	4	5	6
Example	WZ06S	20	-00350	-00780	C	N

1. Type of unit
WZ06 = WZ60 unit
WZ08 = WZ80 unit

2. Ball screw lead
05 = 5 mm
10 = 10 mm
20 = 20 mm
50 = 50 mm

3. Maximum stroke (Smax)
- • • • • • = distance in mm

4. Total length of unit (L tot)
- • • • • = distance in mm

5. Drive shaft configuration
A = shaft without key way
C = shaft with key way

6. Extension tube configuration
N = standard

[1] See table below for available combinations of units and screw leads.

Type of unit	Available screw leads [mm]			
	5	10	20	50
WZ06	x		x	x
WZ08	x	x	x	x

Note! for ordering of options type EN, ES, KRG, RT and MGK, see accessory index on page 131.

Ordering Keys

Non-driven Linear Motion Systems

WH40N, WH50N, WH80N, WH120N

Your Code						
	1	2	3	4	5	6
Example	WH04N000	-04500	-04640	K	N	-0000

1. Type of unit
WH04N000 = WH40N unit
WH05N000 = WH50N unit
WH08N000 = WH80N unit
WH12N000 = WH120N unit

2. Maximum stroke (Smax)
- • • • • • = distance in mm

3. Total length of unit (L tot)
- • • • • • = distance in mm

4. Drive shaft configuration[1]
K = no shaft

5. Carriage configuration
N = single standard carriage
L = single long carriage
Z = double standard carriages

6. Distance between double carriages
- 0000 = always for single carriages
- • • • • = distance in mm

WM40N, WM60N, WM80N, WM120N

Your Code						
	1	2	3	4	5	6
Example	WM08N000	-07010	-07210	K	N	-0000

1. Type of unit
WM04N000 = WM40N unit
WM06N000 = WM60N unit
WM08N000 = WM80N unit
WM12N000 = WM120N unit

2. Maximum stroke (Smax)
- • • • • • = distance in mm

3. Total length of unit (L tot)
- • • • • • = distance in mm

4. Drive shaft configuration
K = no shaft

5. Type of carriage[1]
N = single standard carriage
S = single short carriage
L = single long carriage
Z = double standard carriages
Y = double short carriages

6. Distance between double carriages
- 0000 = always for single carriages
- • • • • = distance in mm

[1] See table below for available combinations of units and carriage types.

Type of unit	Available carriage types				
	N	S	L	Z	Y
WM04N000	x		x	x	
WM06N000	x	x	x	x	x
WM08N000	x	x	x	x	x
WM12N000	x		x	x	

Ordering Keys

Non-driven Linear Motion Systems

M75N, M100N

Your Code						
	1	2	3	4	5	6
Example	MG10N000	A	00	X	450	

1. Type of unit
MG07N000 = M75N unit with slide guides
MG10N000 = M100N unit with slide guides
MF07N000 = M75N unit with ball guides
MF10N000 = M100N unit with ball guides

2. Type of carriages
A = single standard carriage
C = double standard carriages

3. Distance between carriages (Lc)
00 = for all single standard carriage units
•• = distance in cm between carriages

4. Screw supports
X = no screw supports

5. Ordering length (L order)
••• = distance in cm

6. Protection option[1]
+S1 = wash down protection

[1] Leave blank if no protection option required.

Terminology

Basic Linear Motion System Terminology

Screw Driven Unit

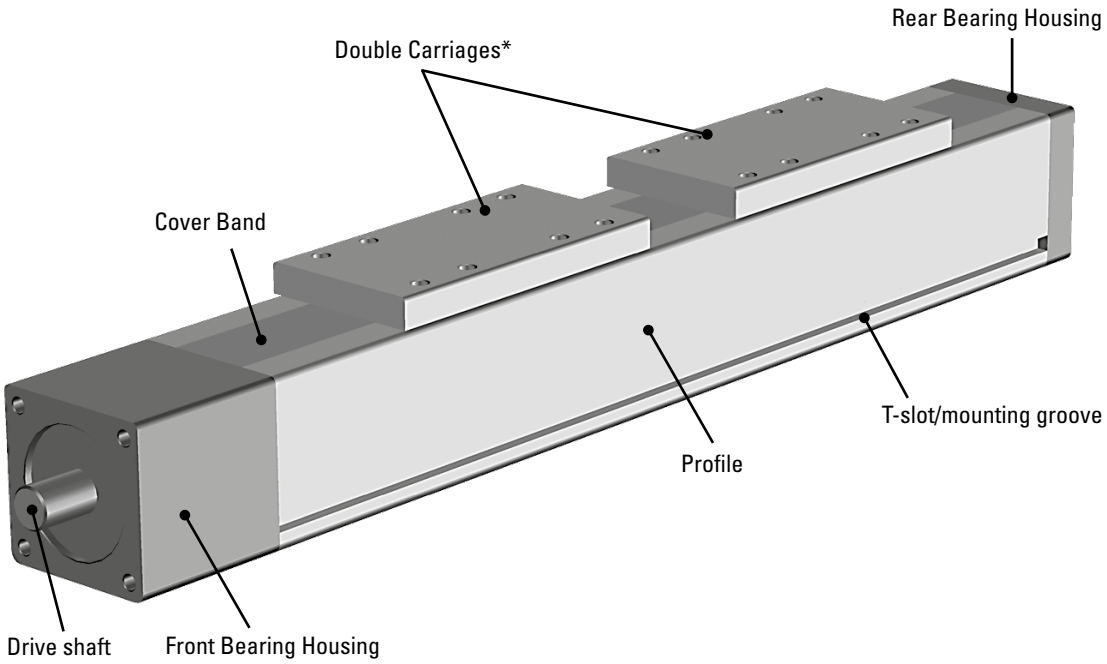

Belt Driven Unit

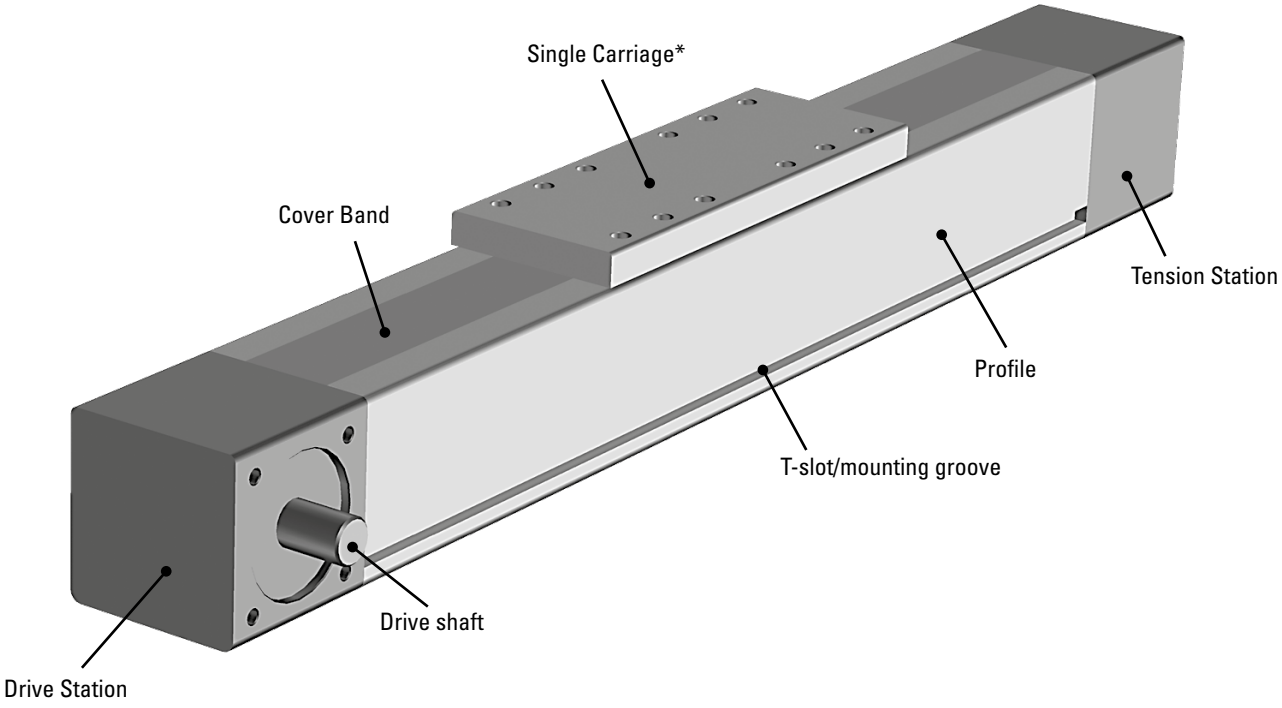

* Both screw and belt driven units can have single or double carriages.

Glossary

A - Belt D

Acceleration
Acceleration is a measure of the rate of speed change going from standstill (or a lower speed) to a higher speed. Please contact customer service if your application is critical to which acceleration rate is acceptable or needed.

Accuracy
There are several types of accuracy and many different factors that will affect the overall accuracy of a system. Also see “Repeatability”, “Positioning Accuracy”, “Resolution”, “Lead Accuracy” and “Backlash”.

Backlash
Backlash is the stack up of tolerances (play) within the leadscrew/belt transmission assembly and gearing which creates a dead band when changing directions. The result is that the motor can rotate some before any motion can be seen on the carriage when reversing the direction of the motor rotation. The backlash varies depending of the liner motion system model.

Ball Guides
A ball guide consists of a ball rail and a ball bushing. The ball rail is made of hardened steel and runs along the inside of the profile. The ball bushing is attached to the carriage of the unit and contains balls that roll against the rail. The balls in the bushing can be recirculating or have fixed ball positions depending on the type of ball guide. The recirculating type has a longer life and better load capability while the fixed type typically is much smaller. Thomson uses three major types of ball guides in its linear motion systems. Either the compact single rail type with recirculating ball bushing (A), the stronger double rail type also with recirculating ball bushings (B) or the fixed ball position ball bushings type (not shown) which require very little space and are used in the smallest units. Ball guides offer high accuracy, high loads and medium speed.

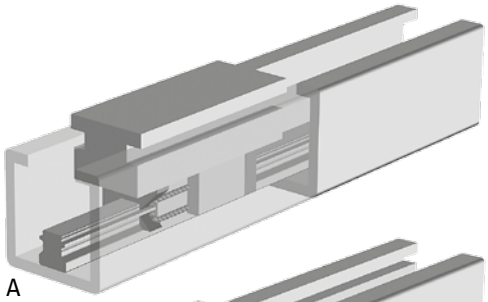

A

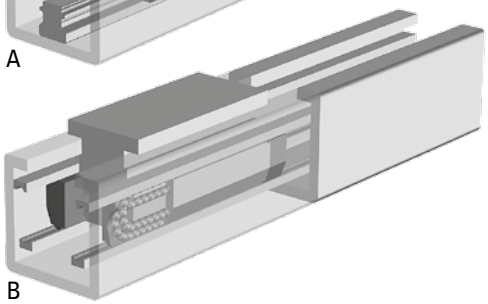

B

Ball Screw Drive
A ball screw is made up of a rotating screw and a moving ball nut. The ball nut is attached to the carriage of the unit. It does not have a normal thread, instead balls circulate inside the nut making it work as an efficient ball bearing that travels along the screw. Ball screws come in a large variety of leads, diameters and tolerance classes. The tolerance class (T3, T5, T7 or T9) indicates the lead tolerance of the screw. The lower the number, the higher the tolerance. High load capability and high accuracy are typical features of ball screw driven units.

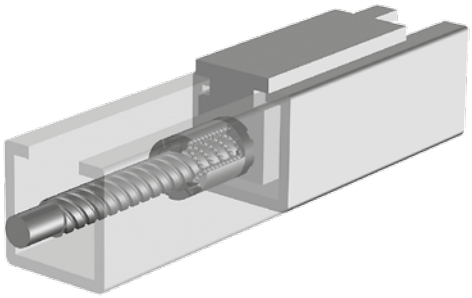

Bearing Housing
Screw driven units has two bearing housings, front and rear. The front bearing housing has a drive shaft while the rear has none. Sometimes however the rear housing can have an optional output shaft which is used to connect to an encoder.

Bell House Flange
A bell house flange is used when a motor should be connected directly to the drive shaft of a linear motion system, i.e when it is direct driven. The bell house has the bolt pattern of the motor flange in one end and the bolt pattern of the drive shaft flange in the other while the two shafts are joined by a coupling. Also see “Direct Drive”.

Belt Drive
A belt drive consists of a toothed belt which is attached to the carriage of the unit. The belt runs between two pulleys positioned at either end of the profile. One pulley is attached to the motor via the drive shaft in the drive station while the other is mounted in a tension station. The belts are made of plastic reinforced with steel cords. High speeds, long stroke, low noise and low overall weight are typical features of belt driven units

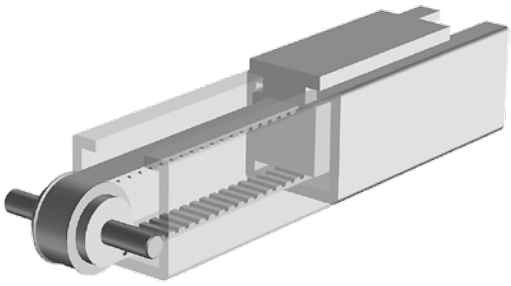

.

Glossary

Belt G - C

Belt Gear
A belt gear consists of a timing belt that runs between two pulley wheels of different diameters. The difference between the diameters determines the gear ratio. Belt gears are quiet, have medium accuracy and require no maintenance but are susceptible to belt breakage under overload conditions.

Brake
None of the units are equipped with a brake or are self-locking which means that a vertical unit will drop the carriage/load if no external brake (such as a brake in the motor, etc.) is applied to the drive shaft.. In the case of belt driven units care must be taken as the carriage/load will drop immediately in the case of a belt breakage. This is particularly important in vertical applications. You also may want to incorporate a brake in to the system to ensure fast and secure stops at an emergency stop or a power failure. In this case the brake should be of the failsafe type, i.e. a brake that is engaged when power is off and lifted when it is on.

Carriage
The carriage is the moving member which travel along the profile of the unit to which the load is attached. Some units can have multiple carriages in order to distribute the weight of the load over a greater distance, this will however reduce the available stroke for a given profile length. There are also units having the option of short or long carriage. The short can carry less weight than a standard one but has a slightly longer stroke for a given profile length while the longer works the other way around. It is possible to fix the carriage(s) to the foundation and let the profile act as the moving member if so desired. This is often the case in vertical applications where you let the profile lift and lower the load.

CE Certificate
Linear motion systems do not need and do therefore not have any CE certification. All Thomson linear motion systems are however designed in accordance with the CE regulations and comes with a manufacturers declaration to prove this. Once the linear motion system is used or made in to a machine it is the responsibility of the end customer to make sure the entire machine that the linear motion system is a part of is in accordance with the applicable CE regulations, produce the documents that proves this and apply a CE mark to the machine.

Cover Band
Cover bands are used on some units to protect them from the ingress of foreign objects through the opening in the profile where the carriage runs and can be made of plastic (A) or stainless steel (B). In the case of plastic the cover band seals the profile by snapping into small grooves running along the carriage opening. In the case of stainless steel the cover band seal the profile magnetically using magnet strips mounted on each side of the carriage opening. Some units also have a self-adjusting cover band tensioning mechanism that eliminates any slack in the cover band that can occur from temperature changes, thus improving the sealing degree and the expected life of the cover band.

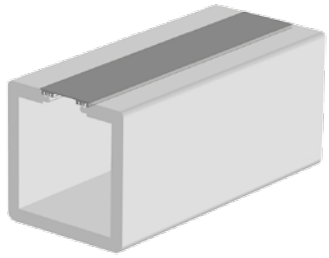

A

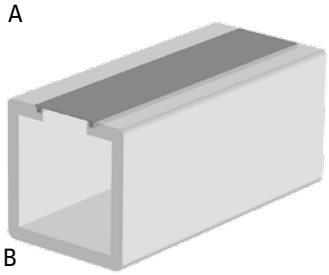

B

Critical Speed
All ball screws have a critical speed where the screw starts to vibrate and eventually bend or warp the screw . The exact limit is a function of how long the screw is and the speed. For some units this means that the allowed maximum speed found in the performance specifications can be higher than the critical speed when the stroke exceeds a certain distance. In this case, either the speed must be reduced to the critical speed, the amount of stroke must be reduced, or you must use the screw support option if the unit in question allows this. Otherwise you must select another unit that can manage the speed at that stroke. The critical speed limits can be found in the “Critical Speed” diagrams on the product pages of the units that this concern.

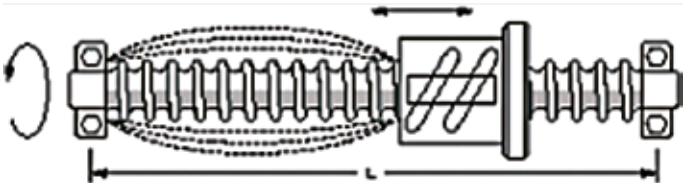

Customization
Despite the large range of linear motion systems offered by Thomson you may not find the exact unit to suit your application. But whatever your need is, Thomson is ready to help you to customize a unit according to your requirements. Please contact customer service for more information.

Cycle
One cycle is when the carriage has travelled back and forth over the complete stroke of the unit one time.

Glossary

D - E

Deceleration
Deceleration is a measure of the rate of speed change going from a higher speed to a lower speed (or standstill). Please contact customer service if your application is critical to which deceleration rate is acceptable or needed.

Definition of Forces
The designations of the forces that acts on the unit are defined on the product page of each unit in the "Definition of Forces" drawing (see example below). Please always use the same definitions whenever communicating with Thomson.

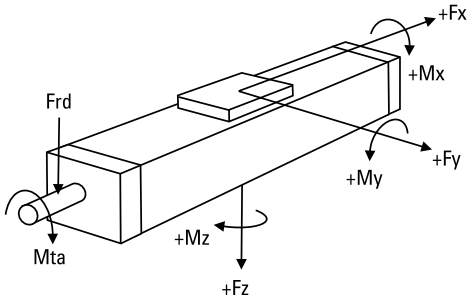

Deflection of the Profile
Some units require support along the whole profile whilst some are self-supporting over a specified span. Further details can be found on the product data pages. The recommended support intervals should be followed to minimize deflection of the unit. The maximum distance between the support points is shown on the product data pages. The deflection of the unit can also be calculated using the information in the "Additional data and calculations" section.

Direct Drive
Direct drive means that there is no gearing between the motor and the drive shaft of the linear motion system. Instead the motor is connected to the unit directly via a coupling and an bell house adapter flange. Also see "Bell House Flange".

Double Ball Nuts
Using double ball nuts will increase the repeatability of the unit. The ball nuts are installed so that they are pre-tensioned against each other eliminating the play between the nuts and the screw. A double nut unit will have a slightly shorter stroke for a given overall length.

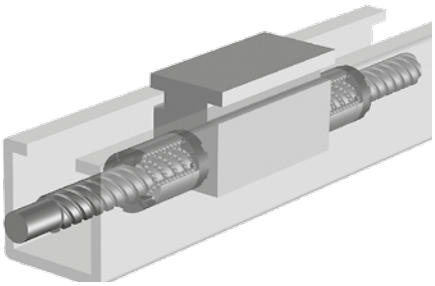

Double Carriages
Double carriage units have two carriages which gives them higher load capabilities than single carriage units. When ordering a double carriage unit the distance between the two carriages needs to be defined. This distance is called L_A or Lc depending on the model.

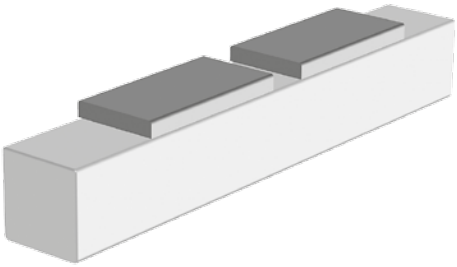

Drive Shaft
The drive shaft is the is the shaft to which the motor is connected, either directly, via a bell house flange or via a gear box. There are many sizes and types of drive shafts, such as shafts with or without key way or hollow shafts, depending on the type and size of the unit. Belt driven units can often have two drive shafts (same or different type and size), one on each side of the drive station, while screw driven only have on pointing out of the end of the unit. Customized drive shafts are possible, please contact customer service for more information.

Drive Station
The drive station is the mechanical assembly in one of the ends of a belt driven unit where the drive shaft is situated.

Duty Cycle
All units are designed for a 100% duty cycle. However, where the unit runs at extreme load, speed, acceleration and temperature or for long operating periods the expected life time may be reduced.

Encoder Feedback
Encoders provide a digital output signal in the form of a square shaped pulse train that can be used to determine the position of the extension tube. The encoder signal in a servo motor system is connected to the motion control so that it can control the servo drive and hence close the position feedback loop.

End of Stroke Limit Switches
If a unit runs at speed to the ends of its stroke there is a risk of damage. Damage can be prevented by using end of stroke limit switches to detect and engage a brake and/or cut power to the motor when the unit nears the end of the unit. You must ensure that there is sufficient distance between the end of stroke limit switch and the end of the unit, to allow the carriage to come to a complete stop before colliding with the end. The required stopping distance depends on the speed and the load and will have to be calculated for each application. The stopping distance must be taken into account when defining the necessary stroke.

Glossary

G - M

Guides
Guides are in essence a form of linear bearings on which the carriage(s) travel. Thomson uses three main types of guides that all have different characteristics and which to choose depends on the demands of the application. Also see “Ball Guides”, “Slide Guides” and “Wheel Guides”.

Idle Torque
Idle torque is the torque needed to move the carriage with no load in it by rotating the drive shaft. The idle torque will vary with the input speed and the idle torque tables on the product pages gives a value for some speeds. The value given in the table is for a unit having a single carriage of standard length. If you need the exact value for another speed, multiple carriages or short/long carriages , please contact our customer service.

Inertia
Inertia is the property of an object to resist speed changes and is dependent on the shape and the mass of the object. The inertia is important when sizing and selecting and also when tuning a servo system to optimum performance. Consult customer service for more information.

Input Shaft
The input shaft is the shaft to which the power source (motor) is connected to on a gear box. Primary shaft is another term for this. Sometimes the drive shaft on a linear unit also is referred to as the input shaft.

Input Speed
Input speed is the rotational speed that the drive shaft/input shaft of a linear motion system or a gear box is subjected to.

Installation and Service Manual
Each linear motions system has an installation and service manual to answer typical questions about mounting and servicing the unit.

Lead Accuracy
Lead accuracy is a measure of how accurate the lead of a ball screw is. For a ball screw with a lead of 25 mm, the screw should in theory move the nut 25 mm per each revolution. In reality there will be a deviation between the expected traveling distance and what is actually achieved. The deviation is typically for a ball screw 0,05 mm per 300 mm of stroke. Contact customer service for more information.

Left/right Moving Carriages
Units with left/right moving carriages have two carriages moving in opposite directions when the drive shaft is rotated. This type of unit has a ball screw where half of the screw has a left hand thread and the other half a right hand thread.

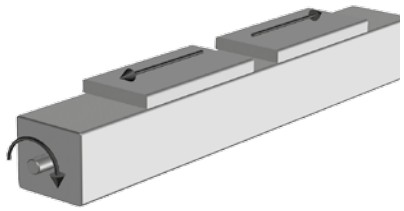

Lifetime Expectancy
When determining the lifetime for a linear motion system it is necessary to evaluate all forces and moments that are acting on the unit. The data and formulas given in this catalogue serve as a basis for this. For a more detailed lifetime calculation please use our sizing and selection software. Please contact us for further guidance.

Linear Lifting System
A linear lifting system is in essence a linear motion system specially designed for vertical lifting applications. Some units can be used in horizontal applications as well under certain criteria. Please contact us if you plan to mount a lifting unit in any other position than vertically with the load carrying plate pointing down.

Linear Motion System
A linear motion system is a mechanical assembly that translates the rotating motion of a motor to the linear motion of a carriage that travel along a load supporting beam/profile. Other names for linear motion systems are linear units, linear drive units and rodless actuators among others.

Load Rating
There are many types of load ratings that all needs to be considered. Normally when you speak about the load you refer to the load that the carriage will move; which is the dynamic load. But there may also be static, side, moment and forces from acceleration, deceleration, gravity and friction that are all equally important. For some units the load and load torque values are given for both the complete unit and the guiding system. The values for the complete unit are the values under which the unit can operate. The values for the guiding system should only be used when comparing different units and do not describe the actual performance of the complete unit.

Maintenance
Most units require lubrication. General lubrication requirements can be found in the general specifications table on the product data pages. The lubrication intervals, grease qualities and specific lubrication instructions can be found in the installation and service manual of each unit. No other regular maintenance is needed except for normal cleaning and inspection. Units with a cover band may also require irregular cover band replacement due to wear. The belt in belt driven units should not require re-tensioning under normal operating conditions.

Manufacturers Declaration
All Thomson linear motion systems comes with a manufacturers declaration to prove that it is built according to the CE regulations.

Mounting
Most units can be mounted in any direction. Any restrictions on mounting positions are shown on the product presentation pages at the beginning of each product category chapter. Even where units may be mounted in any direction there are some considerations. None of the units are self-locking which means that a vertical unit will drop the carriage/load if no

Glossary

N - Sc

external brake (such as a brake in the motor, etc.) is applied to the drive shaft of the unit. In the case of belt driven units care must be taken as the carriage/load will drop immediately in the case of a belt breakage. This is particularly important in vertical applications. All ball screw driven units are equipped with a safety nut to prevent the carriage/load being released in case of ball breakage.

Non-driven Linear Motion Systems

A non-driven linear motion system has no drive shaft or any type of transmission. In reality a non-driven linear motion system is a guide that has the same look and outer dimensions as the driven version. Normally a non-driven unit is used together with a parallel working driven unit that are mechanically linked where the non-driven unit help to share to load with the driven one.

Non-guided Linear Motion Systems

A non-guided linear motion system has a drive shaft and a ball screw but no guides. In reality a non-guided linear motion system is a enclosed ball screw assembly with a carriage that has the same look and outer dimensions as the driven version. Using a non-guided unit requires some kind of external guide to which the carriage can be attached.

Operation and Storage Temperature

Operational temperature limits can be found in the performance tables on the product data pages. Units can be stored or transported within the same temperature range. Please contact us if the unit will be exposed to higher/lower temperatures than recommended during storage or transportation.

Output Shaft

The output shaft is the shaft on a gear box that is connected to object being driven by the gear box. Another term for output shaft is secondary shaft.

Packages and Multi Axis Kits

Thomson can offer complete pre-defined packages (linear motion system, gear and servo motor assembled and shipped with servo drive and cables) as well as mounting kits for the creation of two and three axis systems Please contact us for further information.

Positioning Accuracy

Positioning accuracy is the error between the the expected and actual position and is the sum of all factors that will reduce the accuracy (i.e. repeatability, backlash, resolution, screw/belt accuracy, and the accuracy of the motor, drive and motion control system). Some of these factors, such as backlash and lead accuracy, can sometimes be compensated for in the software of the motion control system being used. Also see “Accuracy”.

Position Feedback

The position of the carriage/rod/lifting profile can be obtained in many ways. The most common way is to equip the unit with an encoder or to use a motor which has a built in feedback device (encoder, resolver, etc.). To many units there are encoders or/and encoder mounting kits available. See the accessory chapter.

Repeatability

Repeatability is the ability for a positioning system to return to a location when approaching from the same distance, at the same speed and deceleration rate. Some of the factors that affect the repeatability are the angular repeatability of the motor, drive and motion control system, system friction and changes in load, speed and deceleration.

Resolution

Resolution is the smallest move increment that the system can perform. Some of the factors that affect the resolution are the angular repeatability of the motor, drive and motion control system, system friction, the drive train reduction, the lead/type of the ball screw/belt and changes in load, speed and deceleration.

Resolver

A resolver is basically a type of rotary electrical transformer used for measuring degrees of rotation and are commonly used on AC servo motors as a feedback device to control the commutation of the motor windings. The resolver is mounted to the end of motor shaft and when the motor rotates the resolver will transmit the position and direction of the rotor to the servo drive which then can control the motor. Most servo drives for AC servo motors on the market today can convert the resolver signal in to a pulse train (encoder signal simulation) which can be used by a motion control to determine and control the position of the motor. Also see “Encoder Feedback”.

RoHS Compliance

The RoHS directive stands for “the restriction of the use of certain hazardous substances in electrical and electronic equipment”. This directive bans the placing on the EU market of new electrical and electronic equipment containing more than agreed levels of lead, cadmium, mercury, hexavalent chromium, polybrominated biphenyl (PBB) and polybrominated diphenyl ether (PBDE) flame retardants. All linear motion systems and accessories sold in the EU are RoHS compliant.

Screw Supports

Screw supports allow screw driven units to travel at high speed even when stroke becomes longer. The supports reduce the unsupported length of the screw, that otherwise would be subjected to vibrations. Screw supports come in single (one screw support on each side of the carriage) or double (two supports on each side) versions. Screw support units will have a slightly shorter stroke for a given overall length.

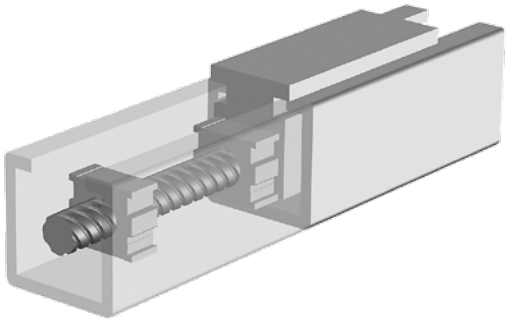

Glossary

Si - W

Single Carriage

Single carriage units have one carriage. Some linear motion system models also have the option of long or short single carriage. The long carriage handle higher loads but will have a longer overall length for a given stroke.

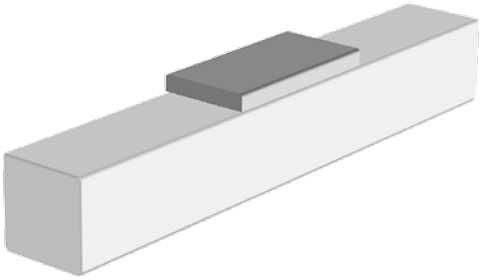

Sizing and Selection

This catalog can give you an overview of what Thomson can offer you and an indication of which products that may suit your application. But in order to get the best solution it is necessary to know your specific application and to carry out detailed sizing and selection calculations. Please contact customer service for further help.

Slide Guides

A slide guide consists of a guide attached to the inside of the profile and a slide bushing attached to the carriage. The guide can be made of different materials (e.g. polished hardened steel, anodized aluminum) while the bushing is made of a polymer material. There are two types of bushings, fixed and prism. Prism bushings can move in relation to the guide which results in longer life and higher load capabilities. Slide bushings are silent, simple, reliable and robust and can be used in dirty and dusty environments. They are also resistant to shock loads, have a long life expectancy and require little or no maintenance.

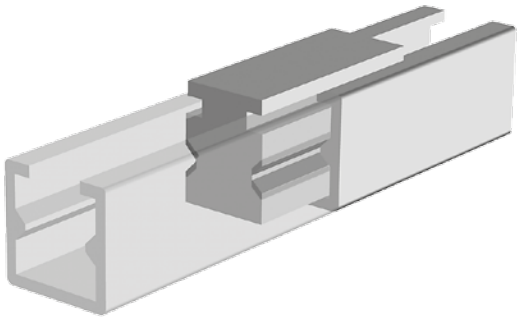

Stroke

The theoretical maximum stroke (Smax) is the length that the carriage can travel from one end of the unit to the other. However, using the maximum stroke means that the carriage will collide with the ends of the profile. The practical stroke is therefore shorter. We recommend that you specify a unit that have at least 100 mm longer stroke than the maximum stroke you need so that the unit can stop before colliding with the ends and also allow for some adjustment of the unit postition at the mounting.

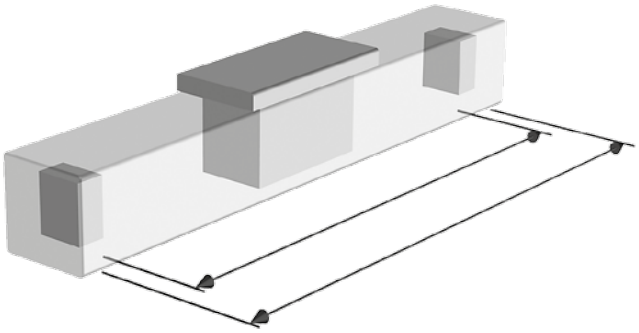

Tension Station

The tension station is the mechanical assembly situated in the opposite end of the drive station on a belt driven unit. The tension station has a mechanism that allows the belt pulley position to be adjusted thus changing the tension of the belt. Adjustment of the belt tension is normally only necessary when replacing a broken or worn out belt with a new.

Wheel Guides

A wheel guide consists of ball bearing wheels that run on a hardened steel rail. Wheel guides are a simple and robust guiding method offering high speeds, high loads and medium accuracy.

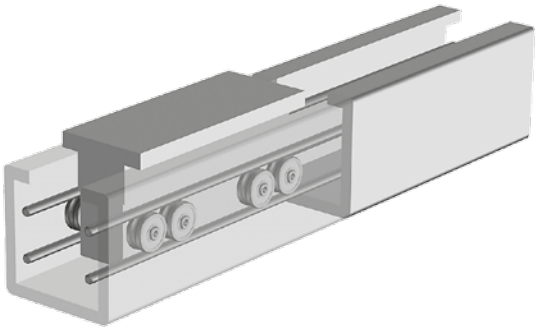

Working Environment

All units are designed for use in normal industrial environments. Units which have an open profile (i.e. have no cover band) are more sensitive to dust, dirt and fluids. These units require some kind of cover if they are used in environments where dust, dirt or fluids are present. Wash down or enhanced wash down protection can be ordered for our closed profile units. Please refer to the accessory pages. In all cases where a unit will be exposed to aggressive chemicals, heavy vibrations or other potentially harmful processes we recommend that you contact us for further advice.

USA, CANADA and MEXICO
Thomson
203A West Rock Road
Radford, VA 24141, USA
Phone: 1-540-633-3549
Fax: 1-540-633-0294
E-mail: thomson@thomsonlinear.com
Literature: literature.thomsonlinear.com

EUROPE
United Kingdom
Thomson
Office 9, The Barns
Caddsdown Business Park
Bideford, Devon, EX39 3BT
Phone: +44 (0) 1271 334 500
E-mail: sales.uk@thomsonlinear.com

Germany
Thomson
Nürtinger Straße 70
72649 Wolfschlugen
Phone: +49 (0) 7022 504 403
Fax: +49 (0) 7022 504 405
E-mail: sales.germany@thomsonlinear.com

France
Thomson
Phone: +33 (0) 243 50 03 30
Fax: +33 (0) 243 50 03 39
E-mail: sales.france@thomsonlinear.com

Italy
Thomson
Largo Brughetti
20030 Bovisio Masciago
Phone: +39 0362 594260
Fax: +39 0362 594263
E-mail: sales.italy@thomsonlinear.com

Spain
Thomson
E-mail: sales.esm@thomsonlinear.com

Sweden
Thomson
Estridsväg 10
29109 Kristianstad
Phone: +46 (0) 44 24 67 00
Fax: +46 (0) 44 24 40 85
E-mail: sales.scandinavia@thomsonlinear.com

ASIA
Asia Pacific
Thomson
E-mail: sales.apac@thomsonlinear.com

China
Thomson
Rm 2205, Scitech Tower
22 Jianguomen Wai Street
Beijing 100004
Phone: +86 400 6661 802
Fax: +86 10 6515 0263
E-mail: sales.china@thomsonlinear.com

India
Thomson
c/o CNRG Energy India Pvt. Ltd.
Unit No. FF A 07
Art Guild House, A Wing, 1st Floor, L.B.S Marg
Kurla – West, Mumbai – 400070 India
Phone: +0091 22 6249 5043
Email: sales.india@thomsonlinear.com

Japan
Thomson
Minami-Kaneden 2-12-23, Suita
Osaka 564-0044 Japan
Phone: +81-6-6386-8001
Fax: +81-6-6386-5022
E-mail: csjapan@scgap.com

South Korea
Thomson ROA
704 ASEM Tower (Samsung-dong)
517 Yeongdong-daero
Gangnam-gu, Seoul, S. Korea, 06164
Phone: +82 2 6917 5048 / 5049
Fax: +82 2 528 1456 / 1457
E-mail: sales.korea@thomsonlinear.com

SOUTH AMERICA
Brazil
Thomson
Av. Tamboré, 1077
Barueri, SP - 06460-000
Phone: +55 11 3616-0191
Fax: +55 11 3611 1982
E-mail: sales.brasil@thomsonlinear.com

www.thomsonlinear.com

Linear_Motion_Systems_CTEN-0008-03 | 20171018TJ
Specifications are subject to change without notice. It is the responsibility of the product user to determine the suitability of this product for a specific application. All trademarks property of their respective owners. © Thomson Industries, Inc. 2017

THOMSON®
Linear Motion. **Optimized.**™